# 6W SIP Package DC-DC Regulated Converter SPBW06 & DPBW06 series

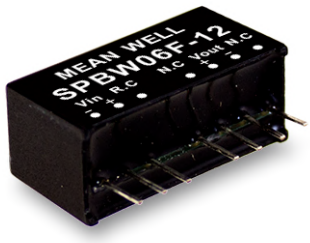


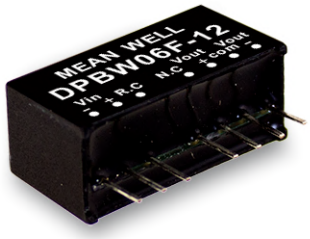


Automate Industrial Security Network Telecom

## Features

- SIP8 package with industry standard pinout
- 4:1 ultrawide input range
- Operating temperature range -40 ~ +85℃
- No minimum load required
- High efficiency up to 89%
- Protections: Short circuit (Continuous) / Overload
- 1.5KVDC I/O isolation
- Remote ON/OFF control
- 3 years warranty

## Applications

- Telecom/datacom system
- Wireless network
- Industrial control facility
- Instrument
- Analyzer
- Detector
- Data switch

## GTIN CODE

MW Search: https://www.meanwell.com/serviceGTIN.aspx

## Description

SPBW06 and DPBW06 series are 6W isolated and regulated module type DC-DC converter with SIP8 package. It features international standard pins, a high efficiency up to 89%, wide working temperature range -40~+85℃, 1.5KVDC I/P-O/P isolation voltage, continuous-mode short circuit protection, etc. The models account for different input voltage 9~36V and 18~75V 4:1 wide input range, and various output voltage, 3.3V/5V/12V/15V for single output and ±5V/±12V/±15V for dual outputs, which are suitable for all kinds of systems, Such as industrial control, telecommunication field, distributed power architecture, and so on.

## Model Encoding

**S PBW06 F – 12**

- 12: Output voltage (3.3/5/12/15Vdc，±5/±12/±15Vdc)
- F: Input voltage (F: 9~36Vdc，G: 18~75Vdc)
- PBW06: Rated wattage
- S: Series name { S:Single output / D:Dual output



LRI Distribuída no Brasil pela LRI | vendas@lri.com.br | 51 2129-3000

## MODEL SELECTION TABLE

| ORDER NO. | INPUT | | | OUTPUT | | EFFICIENCY (TYP.) | CAPACITOR LOAD (MAX.) |
|---|---|---|---|---|---|---|---|
| | INPUT VOLTAGE (RANGE) | INPUT CURRENT | | OUTPUT VOLTAGE | OUTPUT CURRENT | | |
| | | NO LOAD | FULL LOAD | | | | |
| SPBW06F-03 | 24V (9 ~ 36V) | 4mA | 310mA | 3.3V | 0 ~ 1500mA | 81% | 4700μF |
| SPBW06F-05 | | 4mA | 298mA | 5V | 0 ~ 1200mA | 85% | 2200μF |
| SPBW06F-12 | | 5mA | 288mA | 12V | 0 ~ 500mA | 88% | 1100μF |
| SPBW06F-15 | | 5mA | 288mA | 15V | 0 ~ 400mA | 88% | 470μF |
| DPBW06F-05 | | 4mA | 298mA | ±5V | ±0 ~ 600mA | 86% | *1400μF |
| DPBW06F-12 | | 6mA | 288mA | ±12V | ±0 ~ 250mA | 88% | *660μF |
| DPBW06F-15 | | 7mA | 288mA | ±15V | ±0 ~ 200mA | 88% | *220μF |
| SPBW06G-03 | 48V (18 ~ 75V) | 3mA | 155mA | 3.3V | 0 ~ 1500mA | 82% | 4700μF |
| SPBW06G-05 | | 3mA | 150mA | 5V | 0 ~ 1200mA | 85% | 2200μF |
| SPBW06G-12 | | 3mA | 145mA | 12V | 0 ~ 500mA | 88% | 1100μF |
| SPBW06G-15 | | 5mA | 145mA | 15V | 0 ~ 400mA | 87% | 470μF |
| DPBW06G-05 | | 4mA | 150mA | ±5V | ±0 ~ 600mA | 85% | *1400μF |
| DPBW06G-12 | | 3mA | 145mA | ±12V | ±0 ~ 250mA | 89% | *660μF |
| DPBW06G-15 | | 4mA | 145mA | ±15V | ±0 ~ 200mA | 88% | *220μF |

* For each output



LRI Distribuída no Brasil pela LRI | vendas@lri.com.br | 51 2129-3000

# 6W SIP Package DC-DC Regulated Converter SPBW06 & DPBW06 series

| SPECIFICATION | | | | |
|---|---|---|---|---|
| INPUT | VOLTAGE RANGE | F: 9~36Vdc , G: 18~75Vdc | | |
| | SURGE VOLTAGE (100ms max.) | 24Vin models : 50Vdc, 48Vin models : 100Vdc | | |
| | FILTER | Internal capacitor | | |
| | PROTECTION | Fuse recommended. 24Vin models: 1.25A fast-acting Type, 48Vin models: 630mA fast-scting Type | | |
| | INTERNAL POWER DISSIPATION | 500mW | | |
| OUTPUT | VOLTAGE ACCURACY | ±1.5% | | |
| | RATED POWER | 6W | | |
| | RIPPLE & NOISE Note.2 | 100mVp-p | | |
| | LINE REGULATION Note.3 | ±0.2% | | |
| | LOAD REGULATION Note.4 | Single output models: ±0.5%, Dual output models:±1% | | |
| | SWITCHING FREQUENCY (Typ.) | 580KHz | | |
| PROTECTION | SHORT CIRCUIT | Protection type : Continuous, automatic recovery | | |
| | OVERLOAD | Protection type : Recovers automatically after fault condition is removed | | |
| FUNCTION | REMOTE CONTROL | Power ON: R.C. ~ -Vin high impedance open ; Power OFF: supplying 2~4mA for R.C. pin<br>(Please refer to the application circuit in following page) | | |
| ENVIRONMENT | COOLING | Free-air convection | | |
| | WORKING TEMP. | -40 ~ +85℃ (Refer to "Derating Curve") | | |
| | CASE TEMPERATURE | +100℃ max. | | |
| | WORKING HUMIDITY | 20% ~ 90% RH non-condensing | | |
| | STORAGE TEMP., HUMIDITY | -55 ~ +125℃, 10 ~ 95% RH non-condensing | | |
| | TEMP. COEFFICIENT | 0.03% / ℃ (0 ~ 65℃) | | |
| | SOLDERING TEMPERATURE | 1.5mm from case of 1 ~ 3sec./260℃ max. | | |
| | VIBRATION | 10 ~ 500Hz, 2G 10min./1cycle, period for 60min. each along X, Y, Z axes | | |
| SAFETY & EMC ( Note.5) | SAFETY STANDARDS | EAC TP TC 020/2011 (EAC TP TC 004 for 48Vin type only) approved | | |
| | WITHSTAND VOLTAGE | I/P-O/P:1.5KVDC | | |
| | ISOLATION RESISTANCE | I/P-O/P:100M Ohms / 500VDC / 25℃/ 70% RH | | |
| | ISOLATION CAPACITANCE (Typ.) | 50pF | | |
| | EMC EMISSION | **Parameter** | **Standard** | **Test Level / Note** |
| | | Conducted | BS EN/EN55032(CISPR32) | N/A |
| | | Radiated | BS EN/EN55032(CISPR32) | Class A/B with external components |
| | EMC IMMUNITY | **Parameter** | **Standard** | **Test Level / Note** |
| | | ESD | BS EN/EN61000-4-2 | Level 2, ±8KV air, ±4KV contact |
| | | Radiated Susceptibility | BS EN/EN61000-4-3 | Level 2, 3V/m |
| | | EFT/Bursts | BS EN/EN61000-4-4 | Level 1, 0.5KV |
| | | Surge | BS EN/EN61000-4-5 | Level 1, 0.5KV Line-Line |
| | | Conducted | BS EN/EN61000-4-6 | Level 2, 3V(e.m.f.) |
| | | Magnetic Field | BS EN/EN61000-4-8 | Level 2, 3A/m |
| OTHERS | MTBF | 1850Khrs MIL-HDBK-217F(25℃) | | |
| | DIMENSION (L*W*H) | 21.8*9.2*11.1mm (0.86*0.36*0.44 inch) | | |
| | CASE MATERIAL | Non-Conductive black plastic (UL 94V-0 rated) | | |
| | PACKING | 4.5g ; 14pcs/per tube, 2058pcs/147 tube/per carton | | |
| NOTE | 1.All parameters are specified at normal input(F:24Vdc, G:48Vdc), rated load, 25℃ 70% RH ambient.<br>2.Ripple & noise are measured at 20MHz by using a 12" twisted pair terminated with a 0.1μf & 47μf capacitor.<br>3.Line regulation is measured from low line to high line at rated load.<br>4.Load regulation is measured from 0% to 100% rated load.<br>5.The final equipment must be re-confirm that it still meet EMC directives. For guidance on how to perform these EMC tests, please refer to “EMI testing of component power supplies.”(as available on http://www.meanwell.com)<br>※ Product Liability Disclaimer ： For detailed information, please refer to https://www.meanwell.com/serviceDisclaimer.aspx | | | |



LRI Distribuída no Brasil pela LRI | vendas@lri.com.br | 51 2129-3000

## ■ Mechanical Specification

- All dimensions in mm(inch)
- Tolerance:x.x±0.5mm(x.xx±0.02")
- Pin pitch tolerance:±0.05mm (±0.002")

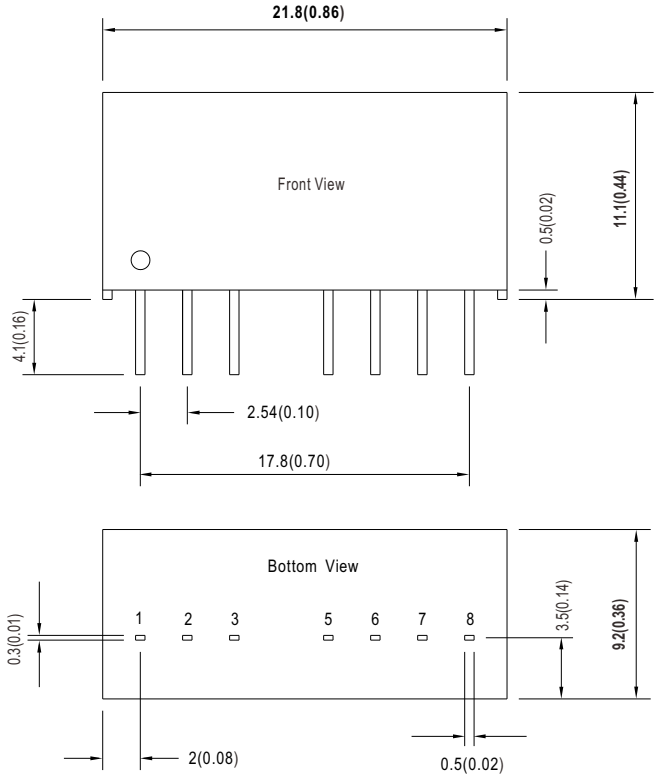


## ■ Plug Assignment

| Pin-Out | | |
|---|---|---|
| Pin No. | SPBW06 (Single output) | DPBW06 (Dual output) |
| 1 | -Vin | -Vin |
| 2 | +Vin | +Vin |
| 3 | R.C. | R.C. |
| 5 | N.C. | N.C. |
| 6 | +Vout | +Vout |
| 7 | -Vout | Common |
| 8 | N.C. | -Vout |

## ■ Derating Curve

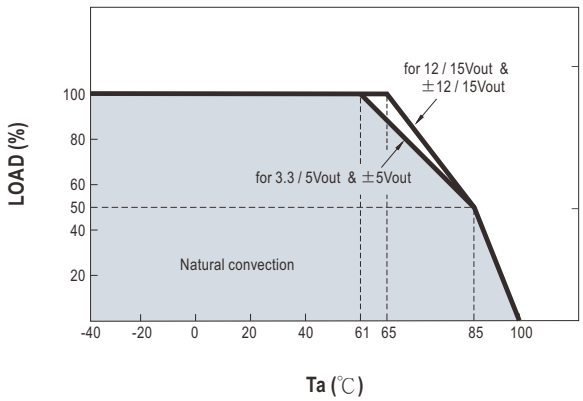




LRI Distribuída no Brasil pela LRI | vendas@lri.com.br | 51 2129-3000

## ■ Remote ON/OFF Control

The remote ON/OFF input feature of the converter allows external circuitry to turn the converter ON or OFF. Active-high remote ON/OFF is available as standard. The converter is turned ON if the remote ON/OFF pin is open circuit. Supply the ON/OFF pin at 2mA to 4mA will turn the converter OFF. The signal level of the ON/OFF pin is defined with respect to ground. If not using the ON/OFF pin, leave the pin open (module will be ON, recommended application as below)

ON/OFF pin appliend current via 1KΩ

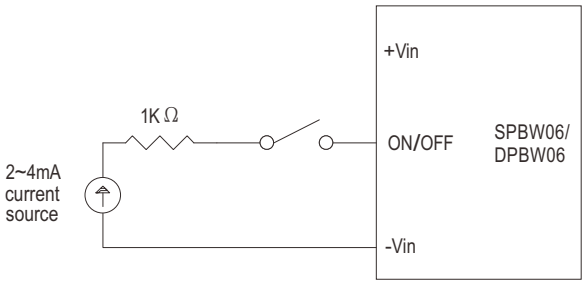


Application circuit

## ■ EMC Suggestion Circuit

※Required external components to meet BS EN/EN55032 class A/B emission are as below:

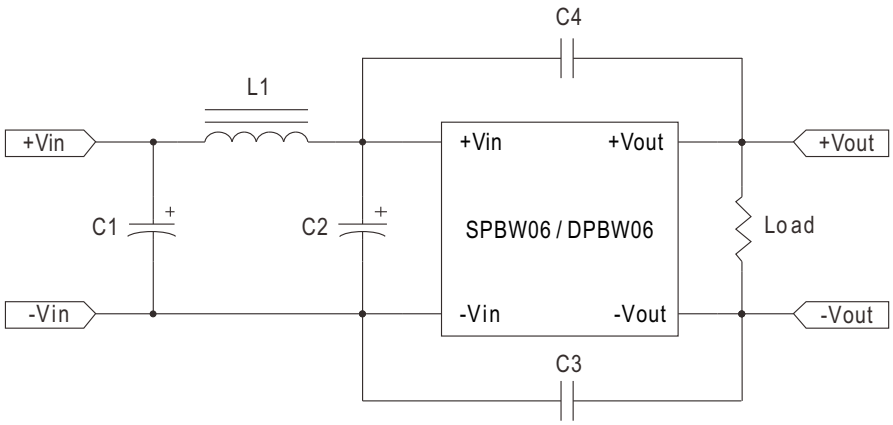


| Model No. | BS EN/EN55032 Class A | | | | | BS EN/EN55032 Class B | | | | |
|---|---|---|---|---|---|---|---|---|---|---|
| | C1 | C2 | C3 | C4 | L1 | C1 | C2 | C3 | C4 | L1 |
| SPBW06F-03 | 10μF/50V | NC | 150pF/2KV | 150pF/2KV | 10μH | 10μF/50V | NC | 1500pF/2KV | 1500pF/2KV | 10μH |
| SPBW06F-05 | 10μF/50V | NC | 150pF/2KV | 150pF/2KV | 10μH | 10μF/50V | NC | 1500pF/2KV | 1500pF/2KV | 10μH |
| SPBW06F-12 | 10μF/50V | NC | 150pF/2KV | 150pF/2KV | 10μH | 10μF/50V | NC | 1500pF/2KV | 1500pF/2KV | 10μH |
| DPBW06F-15 | 10μF/50V | NC | 150pF/2KV | 150pF/2KV | 10μH | 10μF/50V | NC | 1500pF/2KV | 1500pF/2KV | 10μH |
| DPBW06F-05 | 10μF/50V | NC | 150pF/2KV | 150pF/2KV | 10μH | 10μF/50V | NC | 1500pF/2KV | 1500pF/2KV | 10μH |
| DPBW06F-12 | 10μF/50V | NC | 150pF/2KV | 150pF/2KV | 10μH | 10μF/50V | NC | 1500pF/2KV | 1500pF/2KV | 10μH |
| DPBW06F-15 | 10μF/50V | NC | 150pF/2KV | 150pF/2KV | 10μH | 10μF/50V | NC | 1500pF/2KV | 1500pF/2KV | 10μH |
| SPBW06G-03 | 1μF/100V | NC | 150pF/2KV | 150pF/2KV | 10μH | 2.2μF/100V | 2.2μF/100V | 1500pF/2KV | 1500pF/2KV | 10μH |
| SPBW06G-05 | 1μF/100V | NC | 150pF/2KV | 150pF/2KV | 10μH | 2.2μF/100V | 2.2μF/100V | 1500pF/2KV | 1500pF/2KV | 10μH |
| SPBW06G-12 | 1μF/100V | NC | 150pF/2KV | 150pF/2KV | 10μH | 2.2μF/100V | 2.2μF/100V | 1500pF/2KV | 1500pF/2KV | 10μH |
| SPBW06G-15 | 1μF/100V | NC | 150pF/2KV | 150pF/2KV | 10μH | 2.2μF/100V | 2.2μF/100V | 1500pF/2KV | 1500pF/2KV | 10μH |
| DPBW06G-05 | 1μF/100V | NC | 150pF/2KV | 150pF/2KV | 10μH | 2.2μF/100V | NC | 1500pF/2KV | 1500pF/2KV | 10μH |
| DPBW06G-12 | 1μF/100V | NC | 150pF/2KV | 150pF/2KV | 10μH | 2.2μF/100V | NC | 1500pF/2KV | 1500pF/2KV | 10μH |
| DPBW06G-15 | 1μF/100V | NC | 150pF/2KV | 150pF/2KV | 10μH | 2.2μF/100V | NC | 1500pF/2KV | 1500pF/2KV | 10μH |

Note: All of capacitors are ceramic capacitors



LRI Distribuída no Brasil pela LRI | vendas@lri.com.br | 51 2129-3000

## ■ Packing

| Standard Tube Packing | MPQ Per Tube (PCS) | One Tube G.W. | Max. Q'TY/ Carton(PCS) | One Carton G.W. |
|---|---|---|---|---|
| Unit : mm<br>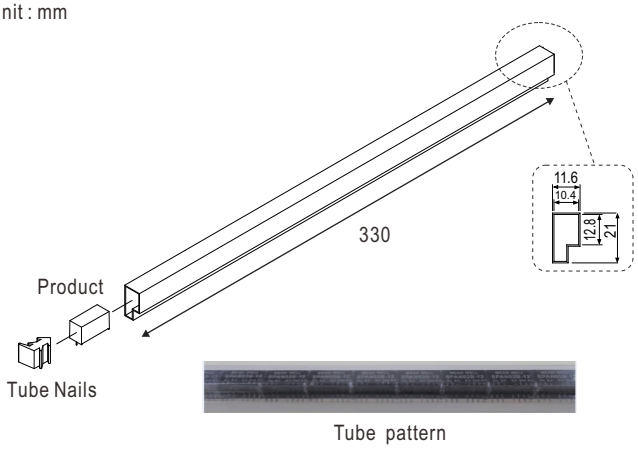<br><br>Tube pattern<br>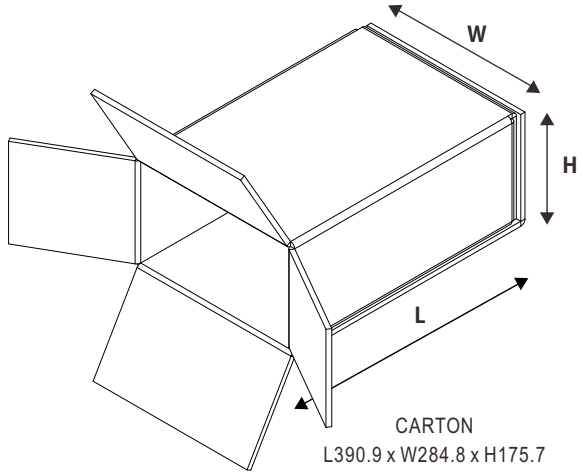<br>CARTON<br>L390.9 x W284.8 x H175.7 | 14 | 81.5g | 2058 | 13.98Kg |

## ■ Installation Manual

Please refer to : http://www.meanwell.com/manual.html



Distribuída no Brasil pela LRI | vendas@lri.com.br | 51 2129-3000