10W 1"x1" Package DC-DC Regulated Converter **SKM10 & DKM10 series**





Automate Industrial Security Network Telecom

Features

- DIP 1"x1" package with industry standard pinout
- 2:1 wide input range
- Operating temperature range -40 ~ +85℃
- No minimum load required
- Comply to BS EN/EN55032 radiated Class A without additional components
- High efficiency up to 90%
- Protections: Short circuit (Continuous) / Overload / Over voltage / Input under voltage
- 1.5KVDC I/O isolation
- Remote ON/OFF control and Triming output (±10%)
- 3 years warranty

Applications

- Telecom/datacom system
- Wireless network
- Industrial control facility
- Instrument
- Analyzer
- Detector
- Data switch

GTIN CODE

MW Search: https://www.meanwell.com/serviceGTIN.aspx

Description

SKM10 and DKM10 series are 10W isolated and regulated module type DC-DC converter with DIP 1"x1" package. It features international standard pins, a high efficiency up to 90%, wide working temperature range -40~+85℃, 1.5KVDC I/P-O/P isolation voltage, Compliance to BS EN/EN55032 radiated Class A without additional components, continuous-mode short circuit protection, etc. The models account for different input voltage 4.7~9V, 9~18V, 18~36V and 36~75V 2:1 wide input range, and various output voltage, 3.3V/5V/12V/15V for single output and ±5V/±12V/±15V for dual outputs, which are suitable for all kinds of systems, Such as industrial control, telecommunication field, distributed power architecture, and so on.

Model Encoding

S KM10 E – 12

- 12 → Output voltage (3.3/5/12/15Vdc，±5/±12/±15Vdc)
- E → Input voltage (E: 4.7~9Vdc，A: 9~18Vdc，B: 18~36Vdc，C: 36~75Vdc)
- KM10 → Rated wattage
- S → Series name { S:Single output / D:Dual output

LRI Distribuída no Brasil pela LRI | vendas@lri.com.br | 51 2129-3000

MODEL SELECTION TABLE

ORDER NO.	INPUT			OUTPUT		EFFICIENCY (Typ.)	CAPACITOR LOAD (MAX.)
	INPUT VOLTAGE (RANGE)	INPUT CURRENT		OUTPUT VOLTAGE	OUTPUT CURRENT		
		NO LOAD	FULL LOAD				
SKM10E-03	5V (4.7 ~ 9V)	85mA	1897mA	3.3V	2500mA	87%	2470μF
SKM10E-05		85mA	2299mA	5V	2000mA	87%	2000μF
SKM10E-12		30mA	2298mA	12V	833mA	87%	940μF
SKM10E-15		30mA	2297mA	15V	666mA	87%	690μF
DKM10E-05		40mA	2353mA	±5V	±0 ~ 1000mA	85%	*1000μF
DKM10E-12		40mA	2295mA	±12V	±0 ~416mA	87%	*440μF
DKM10E-15		40mA	2297mA	±15V	±0 ~ 333mA	87%	*330μF
SKM10A-03	12V (9 ~ 18V)	30mA	855mA	3.3V	2500mA	81%	2470μF
SKM10A-05		30mA	980mA	5V	2000mA	85%	2000μF
SKM10A-12		35mA	957mA	12V	833mA	89%	940μF
SKM10A-15		35mA	956mA	15V	666mA	87%	690μF
DKM10A-05		40mA	985mA	±5V	±0 ~ 1000mA	85%	*1000μF
DKM10A-12		40mA	957mA	±12V	±0 ~416mA	87%	*440μF
DKM10A-15		40mA	957mA	±15V	±0 ~ 333mA	89%	*330μF
SKM10B-03	24V (18 ~ 36V)	25mA	421mA	3.3V	2500mA	82%	2470μF
SKM10B-05		25mA	490mA	5V	2000mA	85%	2000μF
SKM10B-12		25mA	478mA	12V	833mA	88%	940μF
SKM10B-15		25mA	478mA	15V	666mA	88%	690μF
DKM10B-05		25mA	490mA	±5V	±0 ~ 1000mA	85%	*1000μF
DKM10B-12		25mA	478mA	±12V	±0 ~416mA	88%	*440μF
DKM10B-15		25mA	478mA	±15V	±0 ~ 333mA	90%	*330μF
SKM10C-03	48V (36 ~ 75V)	15mA	213mA	3.3V	2500mA	81%	2470μF
SKM10C-05		15mA	245mA	5V	2000mA	85%	2000μF
SKM10C-12		15mA	239mA	12V	833mA	89%	940μF
SKM10C-15		15mA	239mA	15V	666mA	88%	690μF
DKM10C-05		15mA	246mA	±5V	±0 ~ 1000mA	85%	*1000μF
DKM10C-12		15mA	239mA	±12V	±0 ~416mA	86%	*440μF
DKM10C-15		15mA	239mA	±15V	±0 ~ 333mA	89%	*330μF

* For each output

LRI Distribuída no Brasil pela LRI | vendas@lri.com.br | 51 2129-3000

SPECIFICATION				
INPUT	VOLTAGE RANGE	E: 4.7~9Vdc , A: 9~18Vdc , B: 18~36Vdc , C: 36~75Vdc		
	SURGE VOLTAGE (100ms max.)	5Vin models : 12Vdc, 12Vin models : 25Vdc, 24Vin models : 50Vdc, 48Vin models : 100Vdc		
	FILTER	Pi type		
	PROTECTION	Fuse recommended. 5Vin models: 5A delay time Type, 12Vin models: 4A delay time Type, 24Vin models: 2A delay time Type, 48Vin models: 1A delay time Type		
	INTERNAL POWER DISSIPATION	500mW		
OUTPUT	VOLTAGE ACCURACY	±1.5%		
	RATED POWER	10W		
	RIPPLE & NOISE Note.2	50mVp-p		
	LINE REGULATION Note.3	±0.2%		
	LOAD REGULATION Note.4	Single output models: ±0.2%, Dual output models:±1%		
	SWITCHING FREQUENCY (Typ.)	350KHz		
	EXTERNAL TRIM ADJ. RANGE (Typ.)	±10% (Single output model only)		
PROTECTION	SHORT CIRCUIT	Protection type : Continuous, automatic recovery		
	OVERLOAD	110 ~ 140% rated output power		
		Protection type : Recovers automatically after fault condition is removed		
	OVER VOLTAGE	Protection type : Clamp by diode		
	UNDER VOLTAGE LOCKOUT	Start-up voltage	5Vin: 4.4Vdc, 12Vin: 8.8Vdc, 24Vin: 17Vdc, 48Vin: 34Vdc	
		Shutdown voltage	5Vin: 4.2Vdc, 12Vin: 8Vdc, 24Vin: 16Vdc, 48Vin: 32Vdc	
FUNCTION	REMOTE CONTROL	Power ON: R.C. ~ -Vin >5.5~75Vdc or open circuit ; Power OFF: R.C. ~ -Vin <1.2Vdc or short		
ENVIRONMENT	COOLING	Free-air convection		
	WORKING TEMP.	-40 ~ +85℃ (Refer to "Derating Curve")		
	CASE TEMPERATURE	+105℃ max.		
	WORKING HUMIDITY	20% ~ 90% RH non-condensing		
	STORAGE TEMP., HUMIDITY	-55 ~ +125℃, 10 ~ 95% RH non-condensing		
	TEMP. COEFFICIENT	0.03% / ℃ (0 ~ 71℃)		
	SOLDERING TEMPERATURE	1.5mm from case of 1 ~ 3sec./260℃ max.		
	VIBRATION	10 ~ 500Hz, 2G 10min./1cycle, period for 60min. each along X, Y, Z axes		
SAFETY & EMC (Note.5)	SAFETY STANDARDS	EAC TP TC 020/2011 (EAC TP TC 004 for 48Vin type only) approved		
	WITHSTAND VOLTAGE	I/P-O/P:1.5KVDC		
	ISOLATION RESISTANCE	I/P-O/P:100M Ohms / 500VDC / 25℃/ 70% RH		
	ISOLATION CAPACITANCE (Typ.)	1000pF		
	EMC EMISSION	**Parameter**	**Standard**	**Test Level / Note**
		Conducted	BS EN/EN55032(CISPR32)	N/A
		Radiated	BS EN/EN55032(CISPR32)	Class A
	EMC IMMUNITY	**Parameter**	**Standard**	**Test Level / Note**
		ESD	BS EN/EN61000-4-2	Level 2, ±8KV air, ±4KV contact
		Radiated Susceptibility	BS EN/EN61000-4-3	Level 2, 3V/m
		EFT/Bursts	BS EN/EN61000-4-4	Level 1, 0.5KV
		Surge	BS EN/EN61000-4-5	Level 1, 0.5KV Line-Line
		Conducted	BS EN/EN61000-4-6	Level 2, 3V(e.m.f.)
		Magnetic Field	BS EN/EN61000-4-8	Level 2, 3A/m
OTHERS	MTBF	1200Khrs MIL-HDBK-217F(25℃)		
	DIMENSION (L*W*H)	25.4*25.4*10.2mm (1*1*0.4 inch)		
	CASE MATERIAL	Black coated copper with Non-Conductive Base		
	PACKING	18.3g ; 12pcs/per tube, 600pcs/50 tube/per carton		
NOTE	1.All parameters are specified at normal input(E:5Vdc, A:12Vdc, B:24Vdc, C:48Vdc), rated load, 25℃ 70% RH ambient. 2.Ripple & noise are measured at 20MHz by using a 12" twisted pair terminated with a 0.1μf & 47μf capacitor. 3.Line regulation is measured from low line to high line at rated load. 4.Load regulation is measured from 10% to 100% rated load. 5.The final equipment must be re-confirm that it still meet EMC directives. For guidance on how to perform these EMC tests, please refer to "EMI testing of component power supplies."(as available on http://www.meanwell.com) ※ Product Liability Disclaimer : For detailed information, please refer to https://www.meanwell.com/serviceDisclaimer.aspx			

LRI Distribuída no Brasil pela LRI | vendas@lri.com.br | 51 2129-3000

■ External Output Trimming

In order to trim the voltage up or down one needs to connect the trim resistor either between the trim pin and -Vo for trim-up and between trim pin and +Vo for trim-down. The output voltage trim range is ±10%. This is shown in Figures 1 and 2:

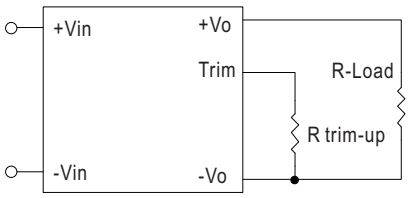

Figure 1. Trim-up Voltage Setup

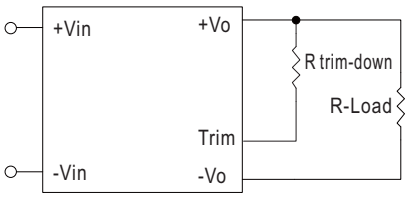

Figure 2. Trim-down Voltage Setup

1. The value of Rtrim-up defined as:

$$R_{trim-up} = \left(\frac{V_r \times R1 \times (R2 + R3)}{(V_o - V_{o,nom}) \times R2}\right) - Rt\ (K\Omega)$$

Where

$R_{trim-up}$ is the external resistor in Kohm.

$V_{o,nom}$ is the nominal output voltage.

V_o is the desired output voltage.

R1, Rt, R2, R3 and Vr are internal to the unit and are defined in Table 1.

Table 1 – Trim up and Trim down Resistor Values

Model Number	Output Voltage(V)	R1 (KΩ)	R2 (KΩ)	R3 (KΩ)	Rt (KΩ)	Vr (V)
SKM10E-03 SKM10A-03 SKM10B-03 SKM10C-03	3.3	2.70	1.8	0.27	9.1	1.25
SKM10E-05 SKM10A-05 SKM10B-05 SKM10C-05	5	2.32	2.32	0	8.2	2.5
SKM10E-12 SKM10A-12 SKM10B-12 SKM10C-12	12	6.8	2.4	2.32	22	2.5
SKM10E-15	15	8.06	2.38	3.9	22	2.5
SKM10A-15 SKM10B-15 SKM10C-15	15	8.06	2.4	3.9	27	2.5

For example, to trim-up the output voltage of 5.0V module (SKM10A-05) by 10% to 5.5V, R trim-up is calculated as follows:

$V_o - V_{o,nom} = 5.5 - 5.0 = 0.5V$

R1 = 2.32 KΩ

R2 = 2.32 KΩ

R3 = 0 KΩ

Rt = 8.2 KΩ

Vr = 2.5V

$$R_{trim-up} = \left(\frac{2.5 \times 2.32 \times (2.32+0)}{0.5 \times 2.32}\right) - 8.2 = 3.4(K\Omega)$$

2. The value of Rtrim-down defined as:

$$R_{trim-down} = R1 \times \left(\frac{V_r \times R1}{(V_{o,nom} - V_o) \times R2} - 1\right) - Rt\ (K\Omega)$$

Where

$R_{trim-down}$ is the external resistor in Kohm.

$V_{o,nom}$ is the nominal output voltage.

V_o is the desired output voltage.

R1, Rt, R2, R3 and Vr are internal to the unit and are defined in Table 1.

For example, to trim-down the output voltage of 5.0V module (SKM10A-05) by 10% to 4.5V, R trim-down is calculated as follows:

$V_{o,nom} - V_o = 5.0 - 4.5 = 0.5V$

R1 = 2.32 KΩ

R2 = 2.32 KΩ

R3 = 0 KΩ

Rt = 8.2 KΩ

Vr = 2.5V

$$R_{trim-down} = 2.32 \times \left(\frac{2.5 \times 2.32}{0.5 \times 2.32} - 1\right) - 8.2 = 1.08\ (K\Omega)$$

LRI Distribuída no Brasil pela LRI | vendas@lri.com.br | 51 2129-3000

■ Mechanical Specification

- All dimensions in mm(inch)
- Tolerance:x.x±0.5mm(x.xx±0.02")
- Pin size is 1±0.1mm (0.04"±0.004")

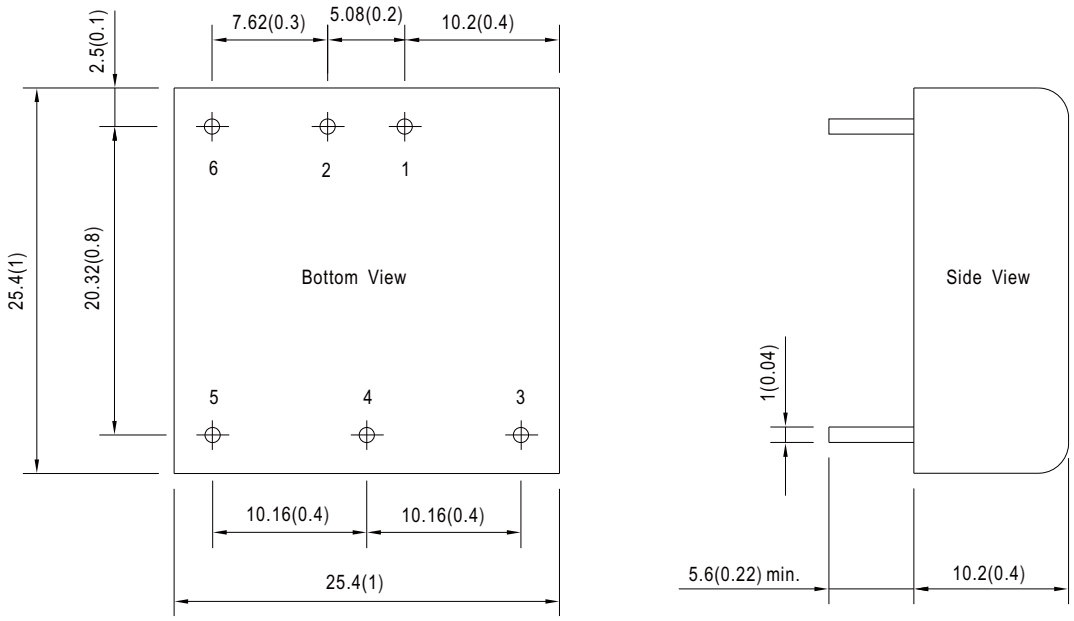

■ Plug Assignment

Pin-Out		
Pin No.	SKM10 (Single output)	DKM10 (Dual output)
1	+Vin	+Vin
2	-Vin	-Vin
3	+Vout	+Vout
4	Trim	Common
5	-Vout	-Vout
6	R.C.	R.C.

■ Derating Curve

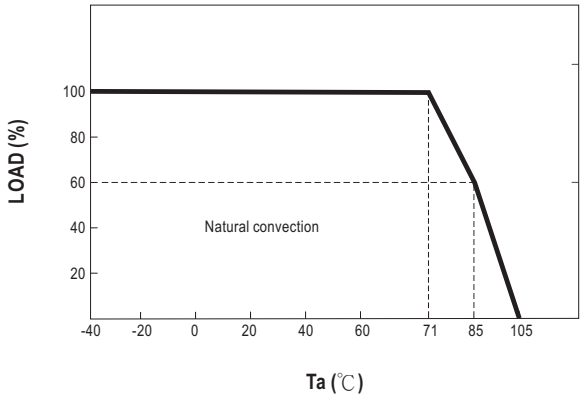

LRI Distribuída no Brasil pela LRI | vendas@lri.com.br | 51 2129-3000

■ Packing

Standard Tube Packing	MPQ Per Tube (PCS)	One Tube G.W.	Max. Q'TY/ Carton(PCS)	One Carton G.W.
Unit : mm 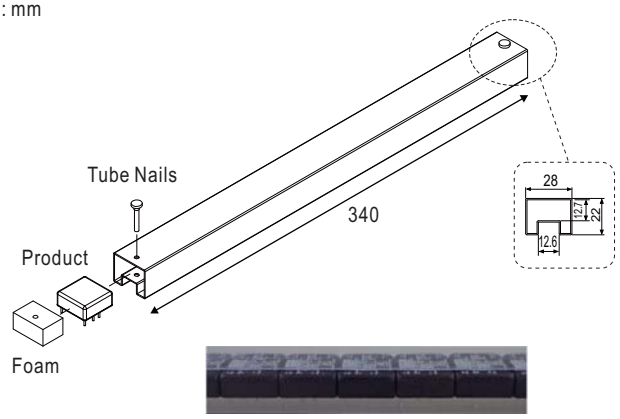 Tube pattern 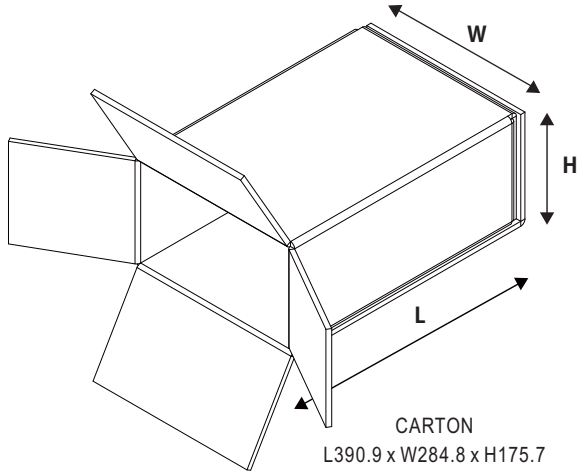 CARTON L390.9 x W284.8 x H175.7	12	255.6g	600	14.78Kg

■ Installation Manual

Please refer to : http://www.meanwell.com/manual.html

LRI Distribuída no Brasil pela LRI | vendas@lri.com.br | 51 2129-3000