

Features :

- 2:1 wide input range
- 1500VDC I/O isolation
- Built-in EMI filter
- Protections: Short circuit / Overload
- Cooling by free air convection
- Five-sided shield metal case
- 100% full load burn-in test
- Low cost / High reliability
- 2 years warranty

GTIN CODE

MW Search: https://www.meanwell.com/serviceGTIN.aspx

SPECIFICATION

ORDER NO.		DCW08A-05	DCW08B-05	DCW08C-05	DCW08A-12	DCW08B-12	DCW08C-12	DCW08A-15	DCW08B-15	DCW08C-15
OUTPUT	DC VOLTAGE	±5V			±12V			±15V		
	CURRENT RANGE	±160 ~ ±800mA			±66 ~ ±335mA			±52 ~ ±267mA		
	RATED POWER	8W								
	RIPPLE & NOISE (max.) Note.2	50mVp-p			60mVp-p			60mVp-p		
	LINE REGULATION Note.3	±0.5%								
	LOAD REGULATION Note.4	±0.5%								
	VOLTAGE ACCURACY	±2.0%								
	SWITCHING FREQUENCY	50KHz min.								
	EXTERNAL CAPACITANCE LOAD (max.)	670uF			100uF			47uF		
INPUT	VOLTAGE RANGE	A: 9 ~ 18VDC	B: 18 ~ 36VDC	C: 36 ~ 72VDC						
	EFFICIENCY (Typ.)	75%	78%	78%	80%	80%	80%	80%	80%	80%
	DC CURRENT	Full load	A: 888mA	B: 426mA	C: 215mA					
		No load	A: 50mA	B: 25mA	C: 15mA					
	FILTER	Pi network								
	PROTECTION	Fuse recommended								
PROTECTION Note.5	OVERLOAD	110 ~ 250% rated output load								
		Protection type : Hiccup mode, recovers automatically after fault condition is removed								
	SHORT CIRCUIT	All output equipped with over current protection								
		Protection type : Hiccup mode, recovers automatically after fault condition is removed								
ENVIRONMENT	WORKING TEMP.	-40 ~ +71℃ (Refer to "Derating Curve")								
	WORKING HUMIDITY	20% ~ 90% RH non-condensing								
	STORAGE TEMP., HUMIDITY	-40 ~ +105℃, 10 ~ 95% RH								
	TEMP. COEFFICIENT	±0.03% / ℃ (0 ~ 50℃)								
	VIBRATION	10 ~ 500Hz, 2G 10min./1cycle, period for 60min. each along X, Y, Z axes								
SAFETY & EMC	SAFETY STANDARDS	EAC TP TC 020/2011 approved								
	WITHSTAND VOLTAGE	I/P-O/P:1.5KVDC								
	ISOLATION RESISTANCE	I/P-O/P: 100M Ohms / 500VDC / 25℃/ 70% RH								
	ISOLATION CAPACITANCE	250pF max.								
	EMC EMISSION	Compliance to BS EN/EN55032 Class B, FCC part 15 Class B, EAC TP TC 020								
	EMC IMMUNITY	Compliance to BS EN/EN61000-4-2,3,4,5,6,8, light industry level, criteria A, EAC TP TC 020								
OTHERS	MTBF	900khrs min. MIL-HDBK-217F (25℃)								
	DIMENSION	31.8*20.3*12.2mm (L*W*H) or 1.25"*0.80"*0.48" inch (L*W*H)								
	PACKING	17.5g ; 15pcs/per tube, 750pcs/50 tube/per carton								

Mechanical Specification

Unit:mm(inch)

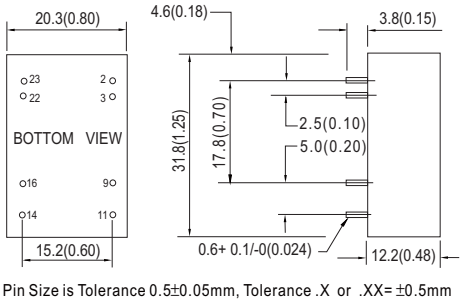

Pin Size is Tolerance 0.5±0.05mm, Tolerance .X or .XX= ±0.5mm

Pin Configuration

Pin No.	Output
2 & 3	-Vin
9	COM
11	-Vout
14	+Vout
16	COM
22 & 23	+Vin

Derating Curve

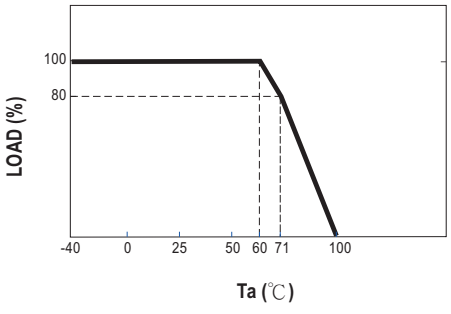

NOTE

1.All parameters are specified at normal input, rated load, 25℃ 70% RH ambient.
2.Ripple & noise are measured at 20MHz by using a 12" twisted pair terminated with a 0.1uf & 47uf capacitor.
3.Line regulation is measured from low line to high line at rated load.
4.Load regulation is measured from 20% to 100% rated load.
5.Please prevent the converter from operating in overload or short circuit condition for more than 30 seconds.
※ Product Liability Disclaimer : For detailed information, please refer to https://www.meanwell.com/serviceDisclaimer.aspx

LRI Distribuída no Brasil pela LRI | vendas@lri.com.br | 51 2129-3000

■ Packing

Standard Tube Packing	MPQ Per Tube (PCS)	One Tube G.W.	Max. Q'TY/ Carton(PCS)	One Carton G.W.
Unit : mm 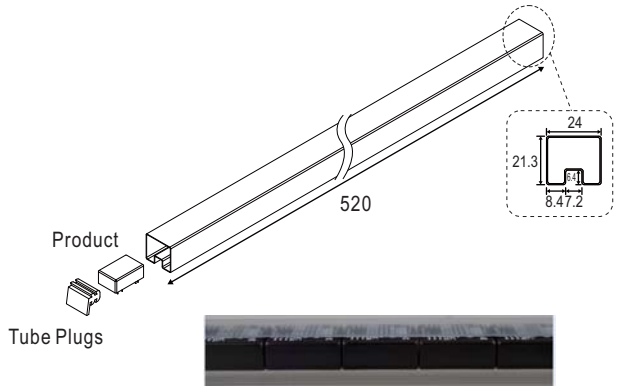 Tube pattern	15	313g	750	17Kg

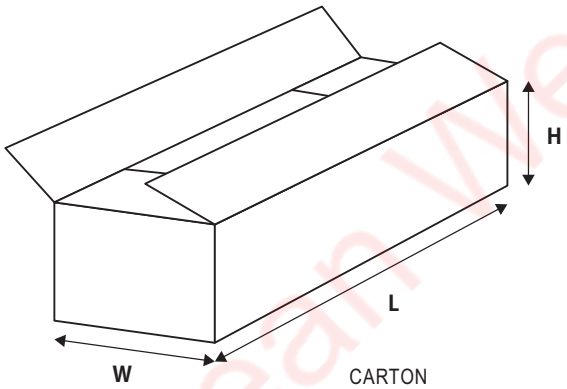

CARTON
L600 x W230 x H220

■ Installation Manual

Please refer to : http://www.meanwell.com/manual.html

Mean Well Brasil

Distribuída no Brasil pela LRI | vendas@lri.com.br | 51 2129-3000