Multi-Industry General Purpose Smart Controller

CMU3 series

Standalone type



Front



Back



Rack mount type



Front



Back



LED | Automate | Industrial | Security | Network | Telecom | Marine | EV

Features

- No control panel design, connect to a smart phone via, Wi-Fi, and operate devices through the APP interface
- Supports multi-application system data integration, consolidating data into the APP interface for control, applicable to inverter applications, power supply applications, and PV applications
- Provides anomaly prediction and analysis, user operation habit analysis, and dynamic adjustment of power output efficiency
- Optionally supports communication interfaces like PMBus and CANbus, RS-485, Ethernet
- Supports multiple network protocols, including MODbus TCP, Web API
- 5 years warranty

Applications

- Industrial automation
- EV Charging station
- UV curing equipment
- Laser diode machines
- Telecommunication systems
- Horticulture lighting
- Building decoration lighting
- Inverter

GTIN CODE

MW Search: https://www.meanwell.com/serviceGTIN.aspx

Description

CMU3 is an advanced industrial controller designed to integrate modern industrial and residential systems, improving operational efficiency, energy management, and system reliability. It supports automation control for lighting, air conditioning, security, and other building applications, enabling flexible device coordination. With comprehensive energy management capabilities, CMU3 can monitor equipment power consumption, provide real-time reports and optimization suggestions, and help improve overall energy efficiency. It also supports fault diagnosis, predictive maintenance, and automation upgrades to meet the needs of various industrial, commercial, and residential scenarios.

Model Encoding

CMU3 (G) [-R]

- -R: Rackmount type
  Blank: Standalone
- G: International Edition
  Blank: Chinese version
- Series name

Distribuída no Brasil pela LRI | vendas@lri.com.br | 51 2129-3000

SPECIFICATION	CMU3 ○□ ○=G, Blank □=-R, Blank		
OUTPUT			
LED INDICATOR	Dual-color, Red, Dual-color three LED lights (Dual-color: Power status, Red flashing:Fault, Dual-color: Internet Status)		
DISPLAY	CMU3: HDMI 2.0 external interface CMU3G: HDMI 1.4 external interface		
RELAY	2 groups, relay contact rating: (30V/1A) (Programmable, configurable according to user requirements)		
STORAGE SPACE	1. RAM : 2G(DDR4) 2. eMMC : 16G 3. SD Card via USB Interface		
EXPANSION SLOT	mini PCIe * 1		
COMMUNICATION	1.RS-485(Modbus)*2 2.CANbus*2 3.PMbus*1 4.Ethernet*2 groups 5.USB2.0: 1*TYPE-C、2*TYPE-A		
WIRELESS COMMUNICATION	1.Wi-Fi (802.11b/g/n) 2.4 GHz 2.NFC		
INPUT			
VOLTAGE RANGE	10 ~ 28VDC		
CURRENT	1.5A / 24V		
PROGRAM DIGITAL INPUT/OUTPUT	4 Channels, open collector signal		
BOTTON	1. On/Off button : To enable or disable all connected devices (PSU, CHG, and INV) collectively. 2. Reset button : Press to reboot CMU3 and revert all configurations to factory defaults		
FUNCTION			
MONITORING TELEMETRY	Customizable monitoring dashboard that supports standardized MEAN WELL parameters and user-defined communication registers		
COMM. INTERFACE Note.1	PMBus, CANbus, RS-485		
LANGUAGE	English, Traditional/Simplified Chinese		
SPEAKER	Alarm		
ETHERNET	Web	Built-in web page allows external browsers to display monitoring and system operation status	
NFC CONNECTIVITY	Proximity Module	Plan NFC for near-field communication, allowing internal or external module expansion can read and set data via	
LOG	1.Data log (device status) 2.Event log (alarm, AC anomalies, etc.) 3.System log (system status, warnings, version information, etc.) 4.Log interval can be set from 1 minutes to 60 minutes 5.Selectable log options (ALL, voltage, current, etc.)		
MULTILINGUAL SUPPORT	English/Traditional Chinese/Simplified Chinese, designed with a unified structure, allowing flexible replacement		
OVER-THE-AIR UPDATE	Update firmware via Ethernet (divided into system update and software update)		
COMMUNICATION PROTOCOLS			
PMBUS	PMBus v1.1		
CANBUS	CANbus 2.0B		
MODBUS	RS-485 RTU		
NETWORK	Support IEEE802.3, 10/100base network x 2		
ETHERNET SUPPORTED			
PROTOCOLS	TCP/IP, NTP, Modbus TCP		
WEB SERVER	Display system status, parameters, recorded or downloaded data		
ENVIRONMENT			
WORKING TEMP.	-25 ~ +60℃		
WORKING HUMIDITY	20 ~ 90% RH non-condensing		
STORAGE TEMP., HUMIDITY	-40 ~ +80℃ , 10~95% RH non-condensing		
VIBRATION	10 ~ 500Hz, 2G 10min./1cycle, 60min. each along X, Y, Z axes		
SAFETY & EMC (Note 2)			
SAFETY STANDARDS	IEC62368-1 approved		
EMC EMISSION	**Parameter**	**Standard**	**Test Level / Note**
	Conducted	BS EN/EN55032(CISPR32),CNS 15936, GB/T 9254.1, FCC	Class B
	Radiated	BS EN/EN55032(CISPR32),CNS 15936, GB/T 9254.1, FCC	Class A
EMC IMMUNITY	BS EN/EN55035(CISPR35)		
	Parameter	**Standard**	**Test Level / Note**
	ESD	BS EN/EN61000-4-2	Level 3, 8KV air ; Level 2, 4KV contact
	Radiated	BS EN/EN61000-4-3	Level 2, 3V/m
	EFT / Burst	BS EN/EN61000-4-4	Level 1, 0.5KV
	Surge	BS EN/EN61000-4-5	Level 1, 0.5KV/Line-Earth ; Level 2, 0.5KV/Line-Line
	Conducted	BS EN/EN61000-4-6	Level 2, 3V
	Magnetic Field	BS EN/EN61000-4-8	Level 1, 1A/m
OTHERS			
MTBF	CMU3G: 694.6K hrs min. Telcordia SR-332 (Bellcore) ; 85.45K hrs min. MIL-HDBK-217F (25℃)		
	CMU3G-R: 694.6K hrs min. Telcordia SR-332 (Bellcore) ; 85.5K hrs min. MIL-HDBK-217F (25℃)		
DIMENSION	**Standalone: 192*178*45.5mm (L*W*H)**	**Rack mount: 482*186.6*44.5mm (L*W*H)**	
PACKING	1.03Kg; 10pcs/11.3Kg/1.47CUFT	2.04Kg; 6pcs/13.2Kg/2.49CUFT	

NOTE

1.Depend on application.
2.The controller is considered a component which will be installed into a final equipment. EMC is tested by the controller unit, no control equipment is connected. The final equipment must re-confirmed that still meets EMC directives. For guidance on how to perform these EMC test, Please refer to “EMI testing of component power supplies”.(as available on https://www.meanwell.com//Upload/PDF/EMI_statement_en.pdf)
3.The RTC power supply used super capacitors, which can last for only 7 days. If the time exceeds the limit, the RTC date must be re-adjusted.
※ Product Liability Disclaimer : For detailed information, please refer to https://www.meanwell.com/serviceDisclaimer.aspx

LRI Distribuída no Brasil pela LRI | vendas@lri.com.br | 51 2129-3000

■ Mechanical Specification (Single Unit)

(Unit: mm , tolerance ±1mm)

Case No. : 252D

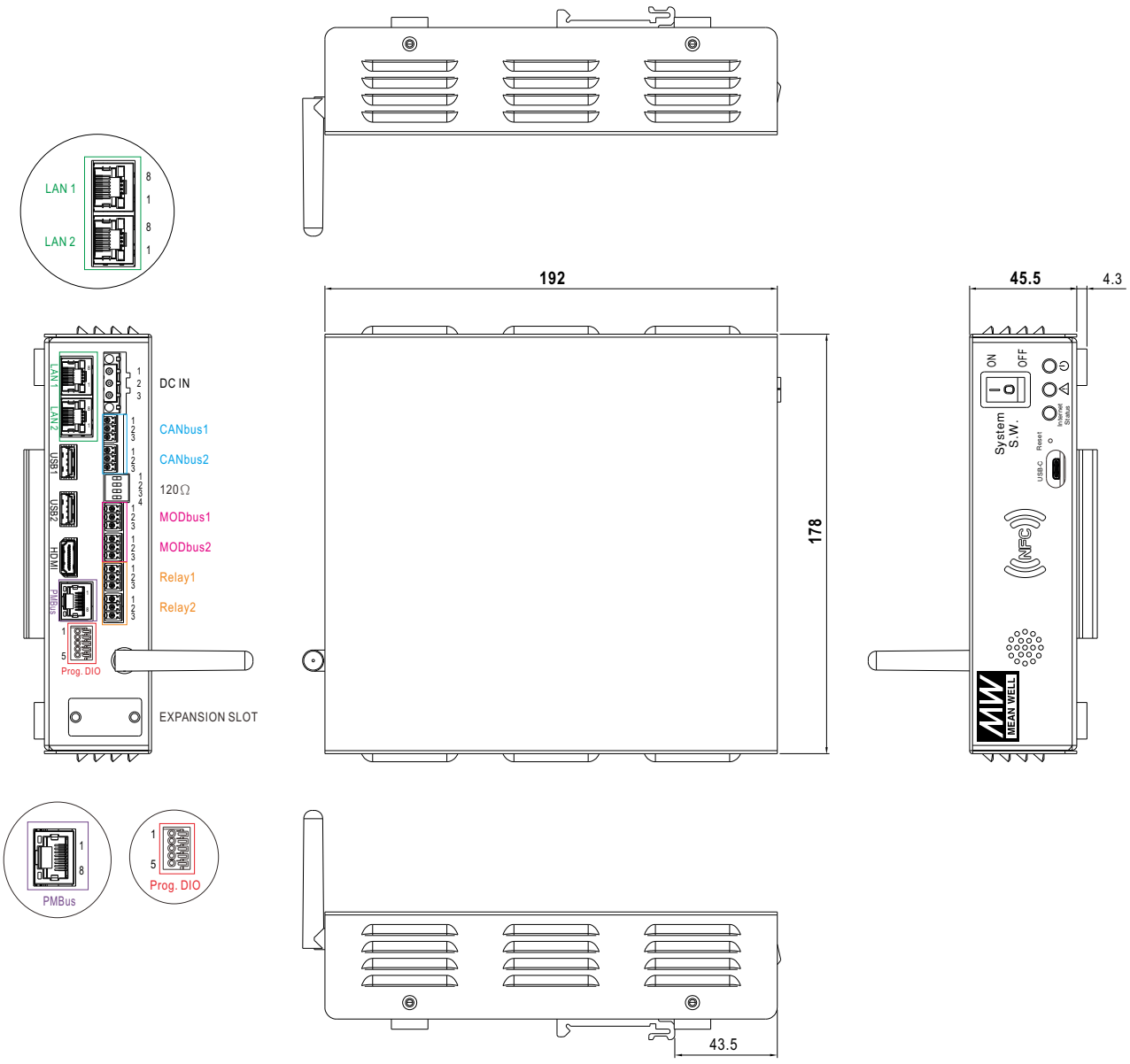

120Ω:

Pin No.	Description
1	Termination resistors(120Ω) for communication.(CANbus1). ON: connect; OFF: disconnect
2	Termination resistors(120Ω) for communication.(CANbus2). ON: connect; OFF: disconnect
3	Termination resistors(120Ω) for communication.(MODbus1). ON: connect; OFF: disconnect
4	Termination resistors(120Ω) for communication.(MODbus2). ON: connect; OFF: disconnect

System S.W:

Device remote control

Distribuída no Brasil pela LRI | vendas@lri.com.br | 51 2129-3000

■ Mechanical Specification (Rack System)

(Unit: mm , tolerance ±1mm)

Case No. : CMU3

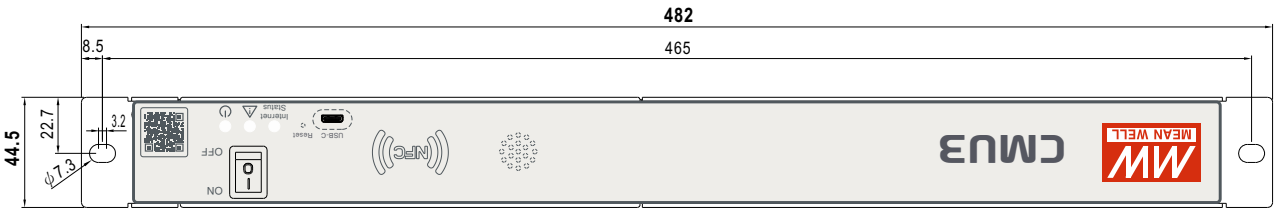

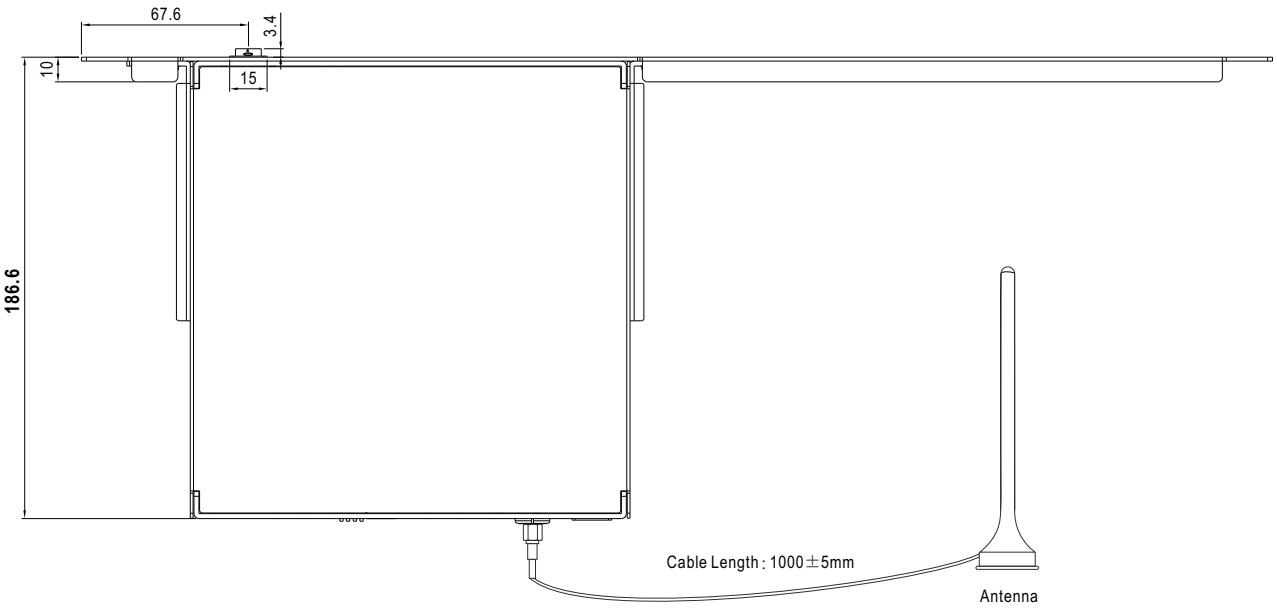

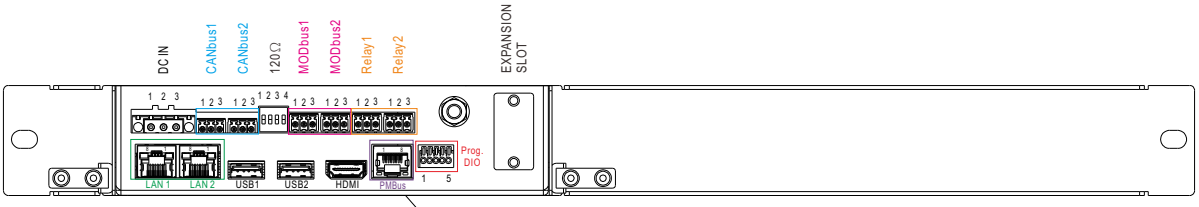

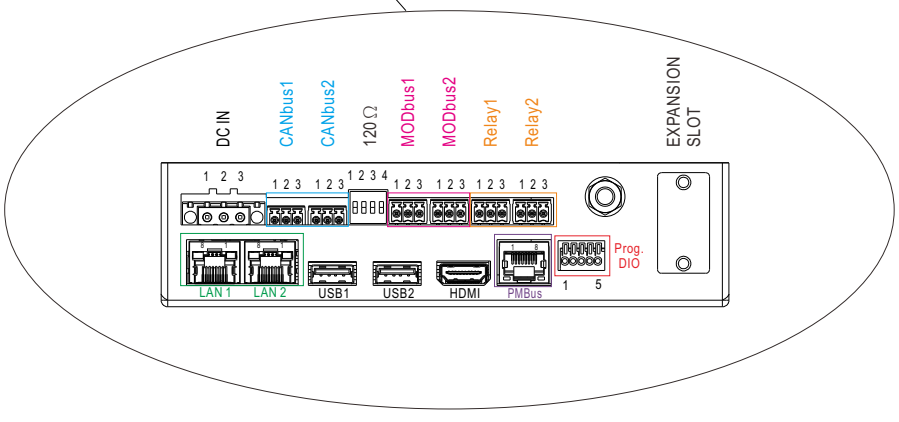

Distribuída no Brasil pela LRI | vendas@lri.com.br | 51 2129-3000

※ LED Status Indicators & Corresponding Signal at Function Pins

LED	Status	Description
Power Indicator	=Power connected	The CMU3 power indicator is on and the device is operating normally
	=No power connected	Power supply or power-on status is abnormal
Alarm Indicator	=Normal operating	Communication is normal and no abnormal status is detected
	=Abnormal status	CMU3 or Rack Power status is abnormal.
Internet Status	Blink = Internet unstable	Network connection is abnormal
	=Internet stable	Network connection is stable

※ Relay Connector Pin No. Assignment (Relay): DECA MX422-25406 or equivalent

Relay1

Pin No.	Function	Description
1	RY1-NO	Normal-open contact of programmable relay1
2	RY1-NC	Normal-close contact of programmable relay1
3	RY1-COM	Common for relay1 NO/NC contact

Relay2

Pin No.	Function	Description
1	RY2-NO	Normal-open contact of programmable relay2
2	RY2-NC	Normal-close contact of programmable relay2
3	RY2-COM	Common for relay2 NO/NC contact

※ DC IN Connector Pin No. Assignment(DIN) : DINKLE 2ESDVM-03P or equivalent

Pin No.	Function	Description
1	FG	Frame Ground (Protective Earthing)
2	-Vin	DC power supply negative input
3	+Vin	DC power supply positive input

※ Digital IN/OUT Connector Pin No. Assignment (Prog. DIO) : DINKLE 141R-05 or equivalent

Pin No.	Function	Description
1	DIO0	Programmable digital input/output
2	DIO1	Programmable digital input/output
3	DIO2	Programmable digital input/output
4	DIO3	Programmable digital input/output
5	GND_AUX	Common GND_AUX for DIO

※ MODbus Connector Pin No. Assignment(MODbus) :DECA MX422-25406 or equivalent

MODbus1

Pin No.	Function	Description
1	D+	Differential digital signal used in the MODbus interface
2	D-	Differential digital signal used in the MODbus interface
3	GND_AUX	Common GND_AUX for signal

MODbus2

Pin No.	Function	Description
1	D+	Differential digital signal used in the MODbus interface
2	D-	Differential digital signal used in the MODbus interface
3	GND_AUX	Common GND_AUX for signal

Distribuída no Brasil pela LRI | vendas@lri.com.br | 51 2129-3000

※ PMBus Connector Pin No. Assignment (PMBus) : RJ45 8 positions

Pin No.	Function	Description
1,2,3,5	NC	Not use
4	CONTROL	Remote ON/OFF control pin (Note)
6	SDA	Serial Data used in the PMBus interface (Note)
7	SCL	Serial Clock used in the PMBus interface (Note)
8	GND_AUX	Common GND_AUX for signal

Note: Isolated signal, with GND_AUX as reference

※ CANbus Connector Pin No. Assignment(CANbus) : DECA MX422-25406 or equivalent

CANbus1

Pin No.	Function	Description
1	CAN-H	CAN-H used in the CANBus interface (Note)
2	CAN-L	CAN-L used in the CANBus interface (Note)
3	GND_AUX	Common GND_AUX for signal

CANbus2

Pin No.	Function	Description
1	CAN-H	CAN-H used in the CANBus interface (Note)
2	CAN-L	CAN-L used in the CANBus interface (Note)
3	GND_AUX	Common GND_AUX for signal

※ LAN Connector Pin No. Assignment (Ethernet): RJ45 8 position

LAN 1

Pin No.	Function	Description
1	TX+	Transmit data used in the Ethernet interface
2	TX-	
3	RX+	Receive data used in the Ethernet interface
4,5,7,8	NC	Not used
6	RX-	Receive data used in the Ethernet interface

LAN 2

Pin No.	Function	Description
1	TX+	Transmit data used in the Ethernet interface
2	TX-	
3	RX+	Receive data used in the Ethernet interface
4,5,7,8	NC	Not used
6	RX-	Receive data used in the Ethernet interface

■ Table for supported models

Model	Supported series
CMU3	NTN-5K

Note: For models not listed, please contact MEAN WELL

LRI Distribuída no Brasil pela LRI | vendas@lri.com.br | 51 2129-3000

Typical Application

System power or Energy Backup System Configuration Cabinet(KW)

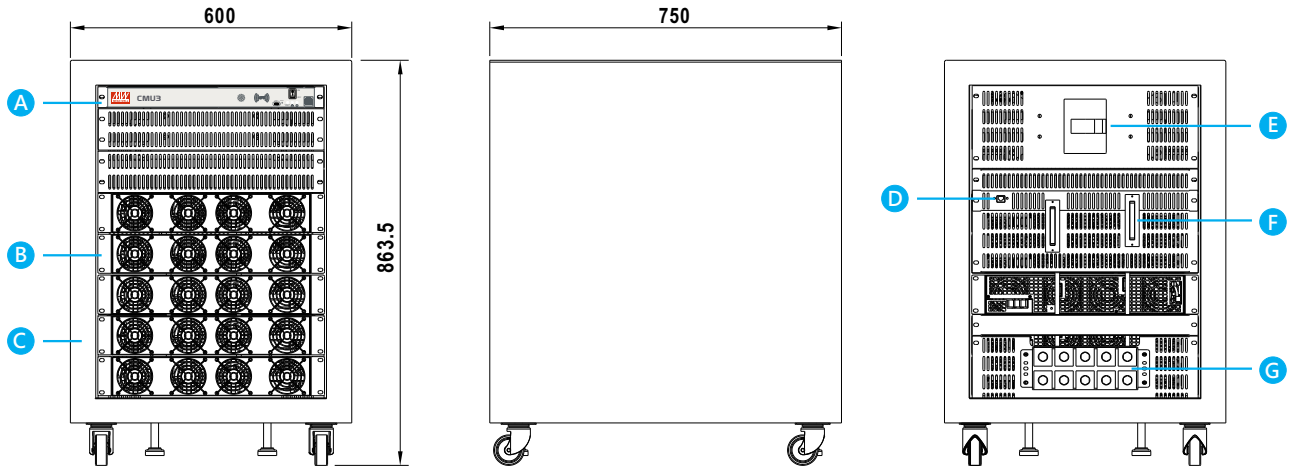

(Front View) (Side View) (Back View)

Item	Description	Item	Description
A	CMU3 Smart Controller	E	AC Input Circuit Breaker
B	SHP-30K-HV Power Supply	F	DC Output Terminal
C	Cabinet	G	AC Input Terminal Block
D	RJ-45 port		

◎ For more system power or solutions, please visit our virtual Expo C3.3 Green Technology product hall.
◎ Any further request, please contact MEAN WELL sales team.

Installation Instruction

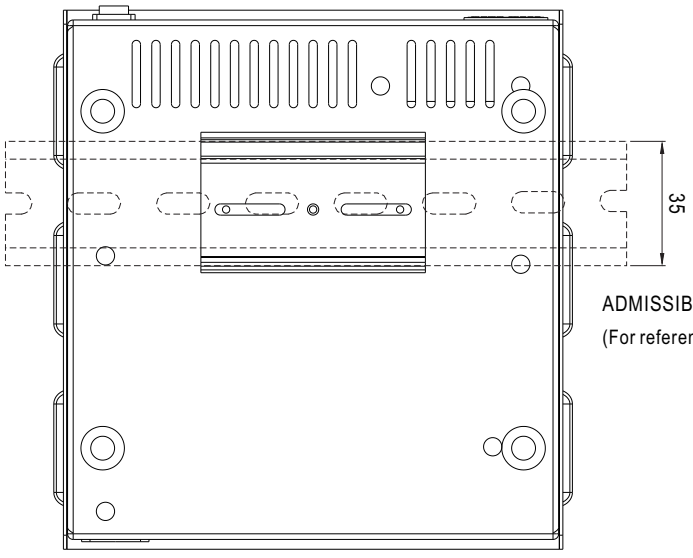

Back View

This series fits DIN rail TS35/7.5 or TS35/15.
For installation details, please refer to the Instruction manual.

ADMISSIBLE DIN-RAIL:TS35/7.5 OR TS35/15
(For reference only. Not included with unit.)

Distribuída no Brasil pela LRI | vendas@lri.com.br | 51 2129-3000

■ Accessory List

Accessories are included in corresponding models

①	PGG2DRP-02	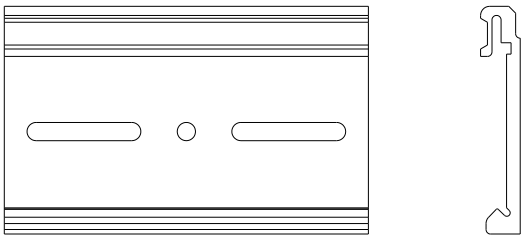

LRI Distribuída no Brasil pela LRI | vendas@lri.com.br | 51 2129-3000