8W Single Output Switching Power Supply

APV-8 series

User's Manual
Click Me



IP42 IS 15885(Part 2/Sec13) R-62002178 (made in India only) IS 15885(Part 2/Sec13) R-41027766 (except for 5V)

Features

- Constant voltage design
- Universal AC input / Full range
- Class Ⅱ power unit, no FG
- Fully isolated plastic case
- IP42 design
- Small and compact size
- Cooling by free air convection
- Protections: Short circuit / Overload / Over voltage
- No load power consumption <0.5W
- 100% full load burn-in test
- Low cost, high reliability
- 2 years warranty

Applications

- Display devices for decorative & advertising accessories (Note.7)
- General-purpose electronics operated in dusty or damp environments

GTIN CODE

MW Search: https://www.meanwell.com/serviceGTIN.aspx

Description

APV-8 series is one 8W AC/DC constant voltage mode single output LED power supply. It accepts the full range input 90~264VAC and provides three models with different output voltage, 5V, 12V, 24V, respectively, that the small wattage LED applications employ the most frequently. Exploiting Class II design (without FG pin) and adopting the 94V-0 flame retardant plastic enclosure, APV-8 ideally fits the entry-level LED applications.

Model Encoding

APV - 8 -12

- 12 — Output voltage
- 8 — Output wattage
- APV — Series name

Distribuída no Brasil pela LRI | vendas@lri.com.br | 51 2129-3000

SPECIFICATION

MODEL		APV-8-5	APV-8-12	APV-8-24
OUTPUT	DC VOLTAGE	5V	12V	24V
	RATED CURRENT	1.4A	0.67A	0.34A
	CURRENT RANGE	0 ~ 1.4A	0 ~ 0.67A	0 ~ 0.34A
	RATED POWER	7W	8.04W	8.16W
	RIPPLE & NOISE (max.) Note.2	250mVp-p	250mVp-p	300mVp-p
	VOLTAGE TOLERANCE Note.3	±5.0%		
	LINE REGULATION	±1.0%		
	LOAD REGULATION	±2.0%		
	SETUP, RISE TIME	500ms, 30ms / 230VAC 1500ms,30ms / 115VAC at full load		
	HOLD UP TIME (Typ.)	20ms/230VAC at full load		
INPUT	VOLTAGE RANGE Note.4	90 ~ 264VAC 127 ~ 370VDC (Note.6)		
	FREQUENCY RANGE	47 ~ 63Hz		
	EFFICIENCY (Typ.)	74%	80%	81%
	AC CURRENT	0.15A/230VAC 0.3A/115VAC		
	INRUSH CURRENT(Typ.)	COLD START 70A(twidth=120μs measured at 50% Ipeak) at 230VAC		
	LEAKAGE CURRENT	0.25mA / 240VAC		
PROTECTION	SHORT CIRCUIT	Hiccup mode, recovers automatically after fault condition is removed		
	OVER LOAD	Above 105% rated output power		
		Protection type : Hiccup mode, recovers automatically after fault condition is removed		
	OVER VOLTAGE	5.75 ~ 6.75V	13.8 ~ 16V	27.6 ~ 32.4V
		Protection type : Shut off o/p voltage, clamping by zener diode		
ENVIRONMENT	WORKING TEMP.	-30 ~ +70℃ (Refer to "Derating Curve")		
	WORKING HUMIDITY	20 ~ 90% RH non-condensing		
	STORAGE TEMP., HUMIDITY	-40 ~ +80℃, 10 ~ 95% RH		
	TEMP. COEFFICIENT	±0.03%/℃ (0 ~ 45℃)		
	VIBRATION	10 ~ 500Hz, 2G 10min./1cycle, period for 60min. each along X, Y, Z axes		
SAFETY & EMC	SAFETY STANDARDS Note.8	UL8750,CSA C22.2 No.250.0-08,BIS IS15885(except for 5V), BIS IS15885(R-62002178 made in India only), EAC TP TC 004, BS EN/EN 62368-1 approved		
	WITHSTAND VOLTAGE	I/P-O/P:3.75KVAC		
	ISOLATION RESISTANCE	I/P-O/P:>100M Ohms / 500VDC / 25℃/ 70% RH		
	EMC EMISSION	Compliance to BS EN/EN55032,BS EN/EN61000-3-2,BS EN/EN61000-3-3, EAC TP TC 020		
	EMC IMMUNITY	Compliance to BS EN/EN55035,BS EN/EN61000-4-2,3,4,5,6,8,11; light industry level(surge 2KV), EAC TP TC 020		
OTHERS	MTBF	9638.4K hrs min. Telcordia SR-332 (Bellcore) ; 1631.5K hrs min. MIL-HDBK-217F (25℃)		
	DIMENSION	60*30*23.5mm(L*W*H)		
	PACKING	0.05Kg;144pcs/7.6Kg/0.79CUFT		

NOTE

1. All parameters NOT specially mentioned are measured at 230VAC input, rated load and 25℃ of ambient temperature.
2. Ripple & noise are measured at 20MHz of bandwidth by using a 12" twisted pair-wire terminated with a 0.1uf & 47uf parallel capacitor.
3. Tolerance : includes set up tolerance, line regulation and load regulation.
4. Derating may be needed under low input voltage. Please check the static characteristics for more details.
5. The power supply is considered as a component that will be operated in combination with final equipment. Since EMC performance will be affected by the complete installation, the final equipment manufacturers must re-qualify EMC Directive on the complete installation again. (as available on https://www.meanwell.com//Upload/PDF/EMI_statement_en.pdf)
6. When applying DC voltage for input, please connect the brown input wire to the positive side whereas blue input wire to the negative side.
7. This product is not intended for LED lighting luminaire applications in the EU and China.(In the EU and China the LPF/NPF/XLG/XLC/XLN series are recommended.)
8. The ambient temperature derating of 3.5℃/1000m with fanless models and of 5℃/1000m with fan models for operating altitude higher than 2000m(6500ft).
9. Products sourced from the Americas regions may not have the ENEC/BIS logo. Please contact your MEAN WELL sales for more information.
10. For any application note and IP water proof function installation caution, please refer our user manual before using. https://www.meanwell.com/Upload/PDF/LED_EN.pdf

※ Product Liability Disclaimer : For detailed information, please refer to https://www.meanwell.com/serviceDisclaimer.aspx

LRI Distribuída no Brasil pela LRI | vendas@lri.com.br | 51 2129-3000

■ Mechanical Specification

Unit:mm Tolerance:±1

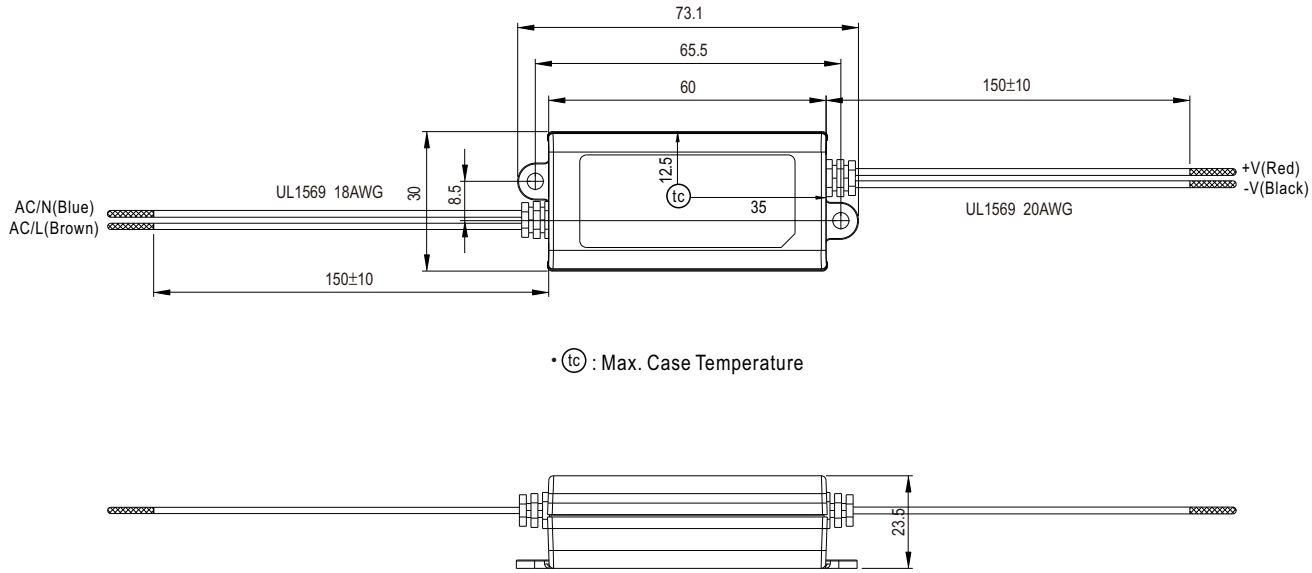

• tc : Max. Case Temperature

■ Block Diagram

fosc : 67KHz

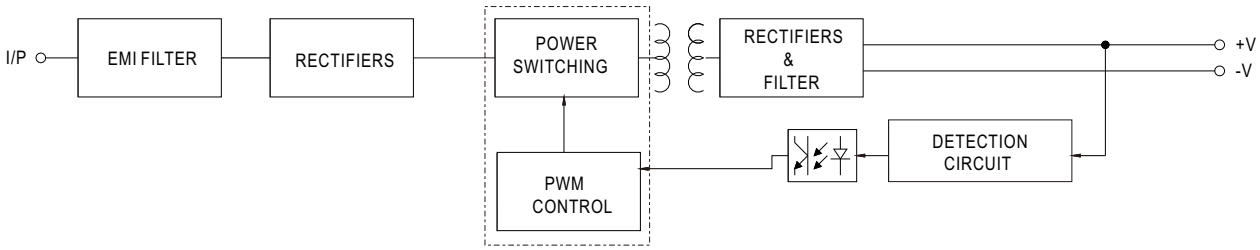

■ Derating Curve

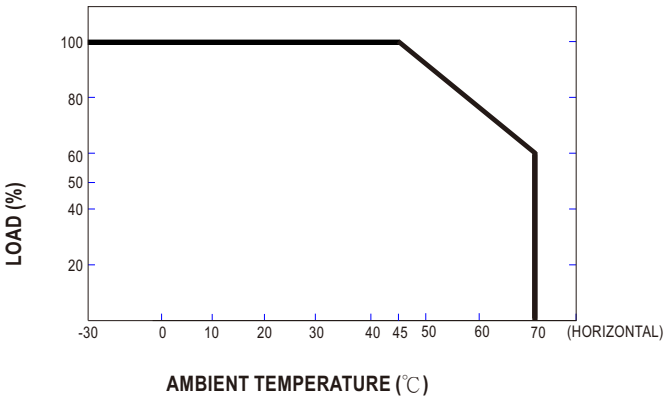

AMBIENT TEMPERATURE (℃)

■ Static Characteristics

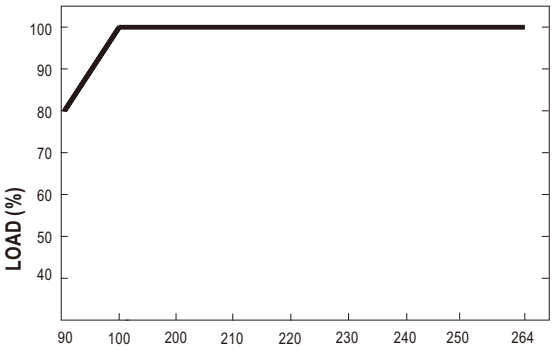

INPUT VOLTAGE (VAC) 60Hz

LRI Distribuída no Brasil pela LRI | vendas@lri.com.br | 51 2129-3000