8W Single Output Switching Power Supply

APC-8 series

User's Manual
Click Me



IP42

Features

- Constant current design
- Universal AC input / Full range
- Class Ⅱ power unit, no FG
- Fully isolated plastic case
- IP42 design
- Small and compact size
- Cooling by free air convection
- Protection:Short circuit
- No load power consumption <0.5W
- 100% full load burn-in test
- Low cost / High reliability
- 2 years warranty

Applications

- Display devices for decorative & advertising accessories (Note.5)

GTIN CODE

MW Search: https://www.meanwell.com/serviceGTIN.aspx

Description

APC-8 series is one 8W AC/DC constant current mode single output LED power supply. It accepts the full range input 90~264VAC and provides four models with different output current, 250mA, 350mA, 500mA and 700mA, respectively, that the small wattage LED applications employ the most frequently. Exploiting Class II design (without FG pin) and adopting the 94V-0 flame retardant plastic enclosure, APC-8 ideally fits the entry-level LED applications.

Model Encoding

APC - 8 -350

- 350 — Output current
- 8 — Output wattage
- APC — Series name

Distribuída no Brasil pela LRI | vendas@lri.com.br | 51 2129-3000

SPECIFICATION

MODEL		APC-8-250	APC-8-350	APC-8-500	APC-8-700
OUTPUT	RATED CURRENT	250mA	350mA	500mA	700mA
	OPERATING VOLTAGE RANGE Note.3	16~32V	11~23V	8~16V	6~11V
	RATED POWER	8W	8.05W	8W	7.7W
	NO LOAD OUTPUT VOLTAGE	38V	29V	24V	17V
	CURRENT ACCURACY	±8.0%			
	SETUP, RISE TIME	500ms, 180ms / 230VAC 3000ms, 150ms / 115VAC at full load			
	HOLD UP TIME (Typ.)	20ms/230VAC at full load			
INPUT	VOLTAGE RANGE Note.2	90 ~ 264VAC 127 ~ 370VDC (Note.4)			
	FREQUENCY RANGE	47 ~ 63Hz			
	EFFICIENCY(Typ.)	82.5%	81.5%	81%	80%
	AC CURRENT	0.15A/230VAC;0.3A/115VAC			
	INRUSH CURRENT(Typ.)	COLD START 70A(twidth=120μs measured at 50% Ipeak) at 230VAC			
	LEAKAGE CURRENT	0.25mA / 240VAC			
PROTECTION	SHORT CIRCUIT	Hiccup mode, recovers automatically after fault condition is removed.			
ENVIRONMENT	WORKING TEMP.	-15 ~ 70℃ (Refer to "Derating Curve")			
	WORKING HUMIDITY	20 ~ 90% RH non-condensing			
	STORAGE TEMP., HUMIDITY	-40 ~ +80℃, 10 ~ 95% RH			
	TEMP. COEFFICIENT	±0.2%/℃ (0 ~45℃)			
	VIBRATION	10 ~ 500Hz, 2G 10min./1cycle, period for 60min. each along X, Y, Z axes			
SAFETY & EMC	SAFETY STANDARDS Note.6	UL8750,CSA C22.2 No.250.0-08, BIS IS15885, EAC TP TC 004; BS EN/EN 62368-1 approved			
	WITHSTAND VOLTAGE	I/P-O/P:3.75KVAC			
	ISOLATION RESISTANCE	I/P-O/P:>100M Ohms / 500VDC / 25℃/ 70% RH			
	EMC EMISSION	Compliance to BS EN/EN55032,BS EN/EN61000-3-2,BS EN/EN61000-3-3, EAC TP TC 020			
	EMC IMMUNITY	Compliance to BS EN/EN55035,BS EN/EN61000-4-2,3,4,5,6,8,11; light industry level(surge 2KV), EAC TP TC 020			
OTHERS	MTBF	14511.7K hrs min. Telcordia SR-332 (Bellcore) ; 2275.9K hrs min. MIL-HDBK-217F (25℃)			
	DIMENSION	60*30*23.5mm(L*W*H)			
	PACKING	0.05Kg;144pcs/7.6Kg/0.79CUFT			
NOTE	1. All parameters NOT specially mentioned are measured at 230VAC input, rated load and 25°C of ambient temperature. 2. Derating may be needed under low input voltage, please check the static characteristic for more details. 3. Constant current operation region is within 50% ~100% rated output voltage. This is the suitable operation region for LED related applications, but please reconfirm special electrical requirements for some specific system design. 4. When applying DC voltage for input, please connect the brown input wire to the positive side whereas blue input wire to the negative side. 5. This product is not intended for LED lighting luminaire applications in the EU and China.(In the EU and China the LPF/NPF/XLG/XLC/XLN series are recommended.) 6. The ambient temperature derating of 3.5°C/1000m with fanless models and of 5°C/1000m with fan models for operating altitude higher than 2000m(6500ft). 7. For any application note and IP water proof function installation caution, please refer our user manual before using. https://www.meanwell.com/Upload/PDF/LED_EN.pdf ※ Product Liability Disclaimer：For detailed information, please refer to https://www.meanwell.com/serviceDisclaimer.aspx				

LRI Distribuída no Brasil pela LRI | vendas@lri.com.br | 51 2129-3000

■ Mechanical Specification

Unit:mm Tolerance:±1

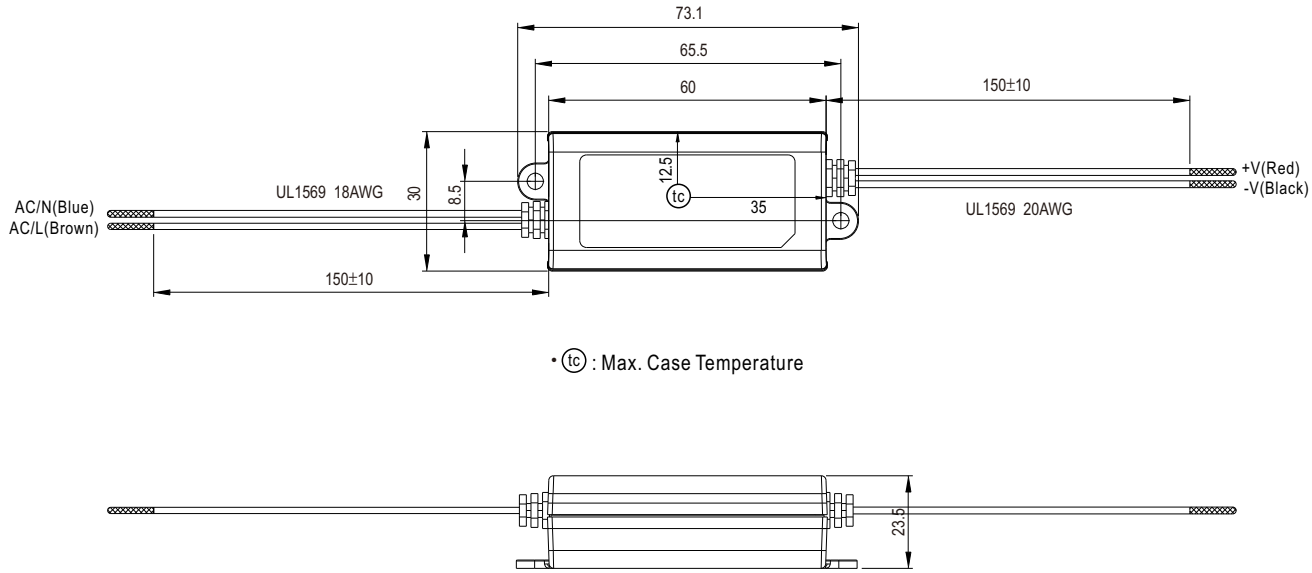

• tc : Max. Case Temperature

■ Block Diagram

fosc : 67KHz

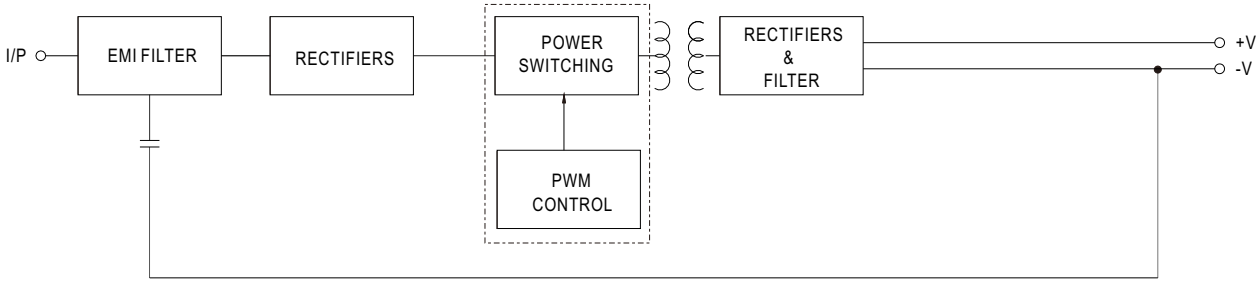

■ Derating Curve

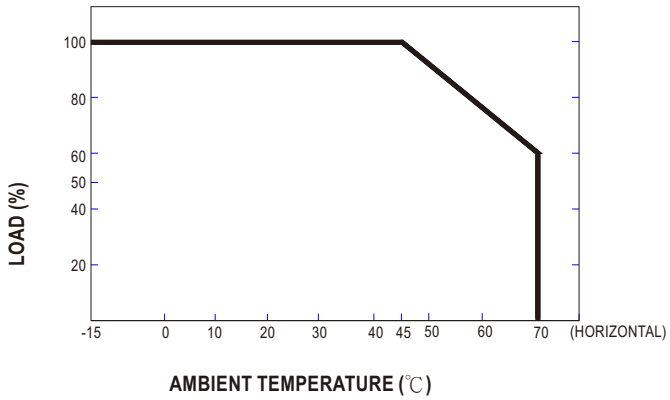

AMBIENT TEMPERATURE (℃)

■ Static Characteristics

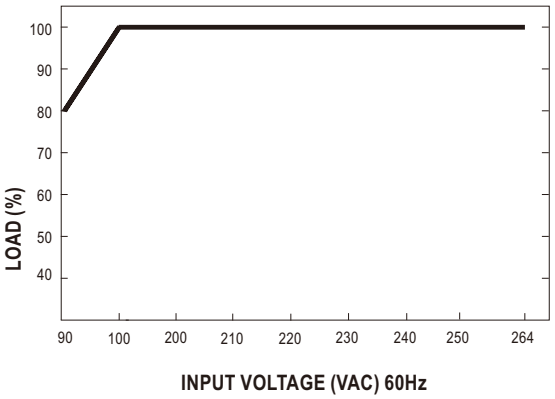

INPUT VOLTAGE (VAC) 60Hz

LRI Distribuída no Brasil pela LRI | vendas@lri.com.br | 51 2129-3000