55W Dual Output with Battery Charger(UPS Function) ADD-55 series

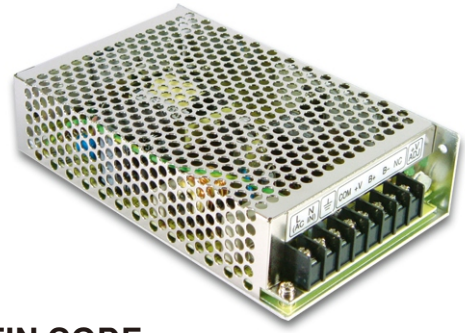

■ Features :

- Universal AC input / Full range
- Protections: Short circuit / Overload / Over voltage
- Battery low protections
- Cooling by free air convection
- 100% full load burn-in test
- Fixed switching frequency at 45KHz
- 2 years warranty

■ GTIN CODE

MW Search: https://www.meanwell.com/serviceGTIN.aspx

UL62368-1 BS EN/EN62368-1 IEC62368-1 TPTC004

SPECIFICATION

MODEL		ADD-55A			ADD-55B		
OUTPUT	OUTPUT NUMBER	CH1	CH2	CH3	CH1	CH2	CH3
	DC VOLTAGE	13.8V	5V	13.4V	27.6V	5V	26.5V
	RATED CURRENT	2.5A	3A	0.23A	1.3A	3A	0.16A
	CURRENT RANGE	0 ~ 3.5A	0 ~ 4A	--------	0 ~ 2A	0 ~ 4A	--------
	RATED POWER	52.58W			55.12W		
	RIPPLE & NOISE (max.) Note.2	100mVp-p	100mVp-p	--------	150mVp-p	150mVp-p	--------
	VOLTAGE ADJ. RANGE	CH1: 12 ~ 14.5V			CH1: 24 ~ 29V		
	VOLTAGE TOLERANCE Note.3	±1.0%	±3.0%	--------	±1.0%	±3.0%	--------
	LINE REGULATION	±1.0%	±0.5%	--------	±1.0%	±0.5%	--------
	LOAD REGULATION	±1.0%	±0.5%	--------	±1.0%	±0.5%	--------
	SETUP, RISE TIME	800ms, 50ms/230VAC 1600ms, 50ms/115VAC at full load					
	HOLD UP TIME (Typ.)	80ms/230VAC 16ms/115VAC at full load					
INPUT	VOLTAGE RANGE	88 ~ 264VAC 124 ~ 370VDC					
	FREQUENCY RANGE	47 ~ 63Hz					
	EFFICIENCY (Typ.)	71%			74%		
	AC CURRENT (Typ.)	1.6A/115VAC 1A/230VAC					
	INRUSH CURRENT (Typ.)	COLD START 20A/115VAC 40A/230VAC					
	LEAKAGE CURRENT	<1mA / 240VAC					
PROTECTION	OVERLOAD	105 ~ 150% rated output power					
		Protection type : AC Charging Mode : Hiccup mode, recovers automatically after fault condition is removed UPS Mode : Protected by internal fuse					
	OVER VOLTAGE	CH1:14.49 ~ 18.63V			CH1:28.98 ~ 37.26V		
		Protection type : Hiccup mode, recovers automatically after fault condition is removed					
FUNCTION	DC ALARM SIGNAL(OPTIONAL)	AC fail CN1 PIN2					
		Battery low under charge voltage 82.5%±2% CN1 PIN1					
		Normal 0.8V max. Abnormal 5V±0.5V					
ENVIRONMENT	WORKING TEMP.	-10 ~ +60℃ (Refer to "Derating Curve")					
	WORKING HUMIDITY	20 ~ 90% RH non-condensing					
	STORAGE TEMP., HUMIDITY	-20 ~ +85℃, 10 ~ 95% RH					
	TEMP. COEFFICIENT	±0.03%/℃ (0 ~ 50℃) on CH1 output					
	VIBRATION	10 ~ 500Hz, 2G 10min./1cycle, 60min. each along X, Y, Z axes					
SAFETY & EMC (Note 4)	SAFETY STANDARDS	UL62368-1, TUV BS EN/EN62368-1, EAC TP TC 004 approved					
	WITHSTAND VOLTAGE	I/P-O/P:3KVAC I/P-FG:2KVAC O/P-FG:0.5KVAC					
	ISOLATION RESISTANCE	I/P-O/P, I/P-FG, O/P-FG:100M Ohms / 500VDC / 25℃/ 70% RH					
	EMC EMISSION	Compliance to BS EN/EN55032 (CISPR32) Class B, BS EN/EN61000-3-2,-3, EAC TP TC 020					
	EMC IMMUNITY	Compliance to BS EN/EN61000-4-2,3,4,5,6,8,11, BS EN/EN55035, light industry level, EAC TP TC 020					
OTHERS	MTBF	2002.7K hrs min. Telcordia SR-332 (Bellcore) ; 373.8K hrs min. MIL-HDBK-217F (25℃)					
	DIMENSION	159*97*38mm (L*W*H)					
	PACKING	0.57Kg; 24pcs/13.7Kg/0.83CUFT					

NOTE

1. All parameters NOT specially mentioned are measured at 230VAC input, rated load and 25℃ of ambient temperature.
2. Ripple & noise are measured at 20MHz of bandwidth by using a 12" twisted pair-wire terminated with a 0.1 μF & 47 μF parallel capacitor.
3. Tolerance : includes set up tolerance, line regulation and load regulation.
4. The power supply is considered a component which will be installed into a final equipment. All the EMC tests are been executed by mounting the unit on a 360mm*360mm metal plate with 1mm of thickness. The final equipment must be re-confirmed that it still meets EMC directives. For guidance on how to perform these EMC tests, please refer to “EMI testing of component power supplies.” (as available on https://www.meanwell.com//Upload/PDF/EMI_statement_en.pdf)
5. The ambient temperature derating of 3.5℃/1000m with fanless models and of 5℃/1000m with fan models for operating altitude higher than 2000m(6500ft).

※ Product Liability Disclaimer : For detailed information, please refer to https://www.meanwell.com/serviceDisclaimer.aspx

LRI Distribuída no Brasil pela LRI | vendas@lri.com.br | 51 2129-3000

Mechanical Specification

(Unit: mm , tolerance ± 1mm)

Case No. 901

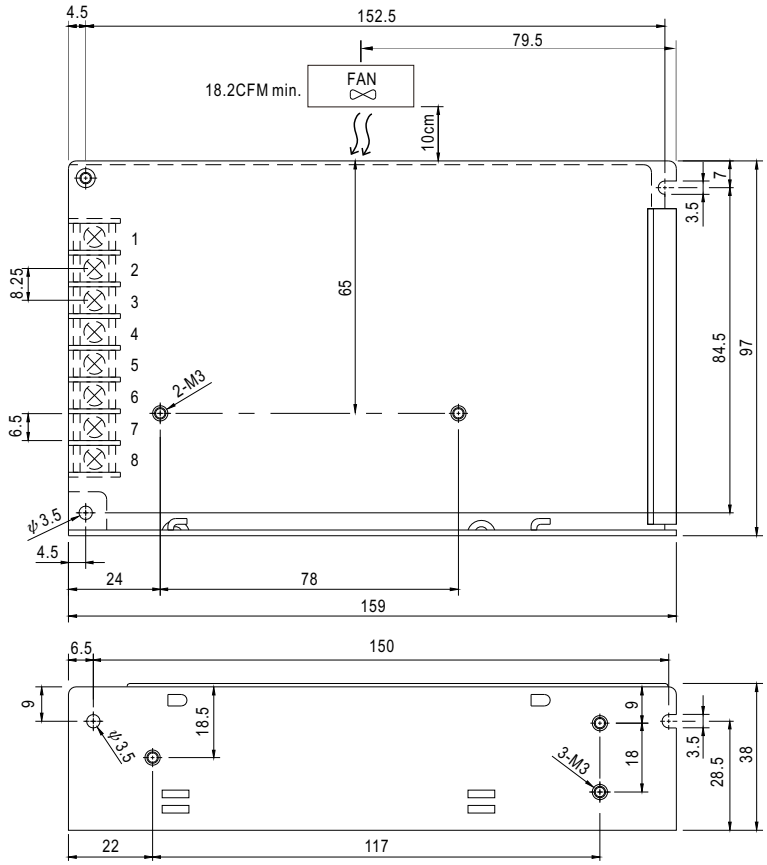

Terminal Pin No. Assignment

Pin No.	Assignment	Pin No.	Assignment
1	AC/L	5	DC OUTPUT +V
2	AC/N	6	BAT. +
3	FG ⏚	7	BAT.-/COM
4	DC OUTPUT COM	8	DC/DC OUTPUT +5V

Block Diagram

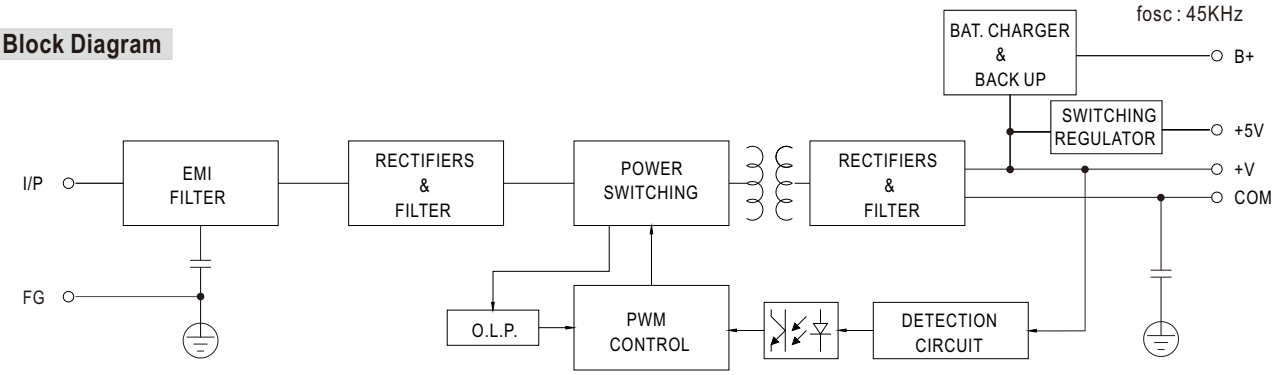

Derating Curve

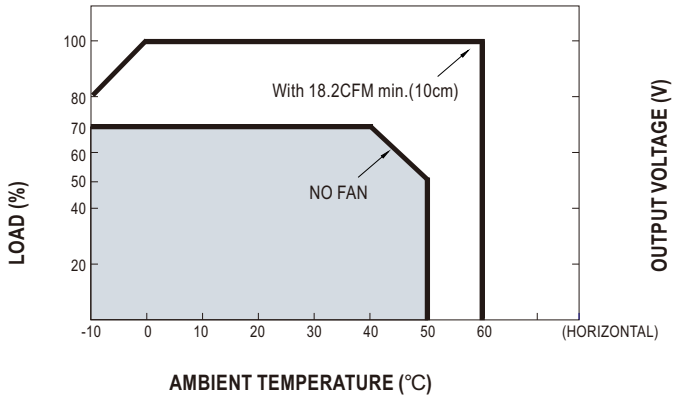

Static Characteristics (A)

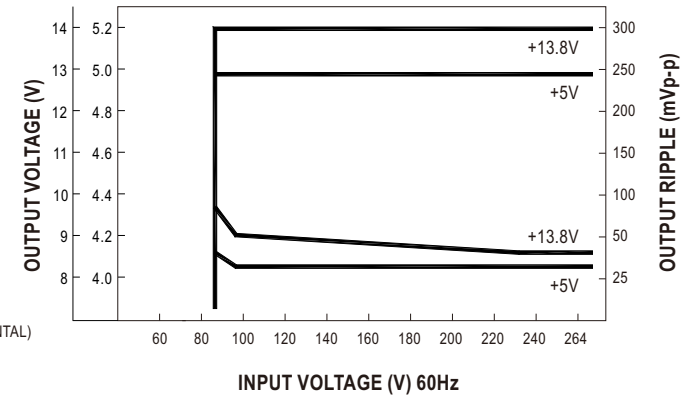

LRI Distribuída no Brasil pela LRI | vendas@lri.com.br | 51 2129-3000